EMPIRE COMFORT SYSTEMS
SINCE 1932

INSTALLATION INSTRUCTIONS

(SEE HOMEOWNER MANUAL FOR OPERATING INSTRUCTIONS)

INSTALLER:
Leave this manual with the appliance.

CONSUMER:
Retain this manual for future reference.

DIRECT VENT ZERO CLEARANCE GAS FIREPLACE HEATER SERIES:
DVCT36CBP95(N,P)-2 | DVCT40CBP95(N,P)-2

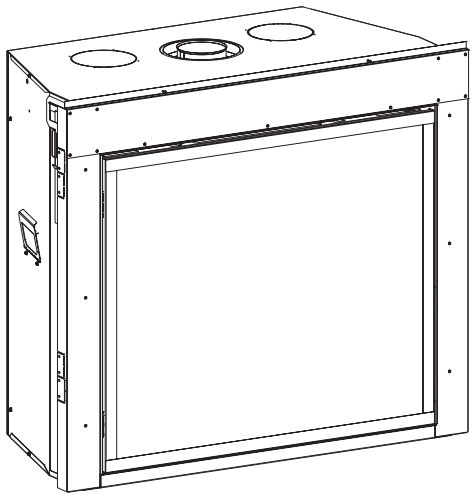

⚠ WARNING

FIRE OR EXPLOSION HAZARD
Failure to follow safety warnings exactly could result in serious injury, death, or property damage.

- **Do not store or use gasoline or other flammable vapors and liquids in the vicinity of this or any other appliance.**
- **WHAT TO DO IF YOU SMELL GAS**
  - **Do not try to light any appliance.**
  - **Do not touch any electrical switch; do not use any phone in your building.**
  - **Leave the building immediately.**
  - **Immediately call your gas supplier from a neighbor's phone. Follow the gas supplier's instructions.**
  - **If you cannot reach your gas supplier, call the fire department.**
- **Installation and service must be performed by a qualified installer, service agency or the gas supplier.**

This appliance may be installed in an aftermarket, permanently located, manufactured home (USA only) or mobile home, where not prohibited by local codes.
This appliance is only for use with the type of gas indicated on the rating plate. This appliance is not convertible for use with other gases, unless a certified kit is used.

⚠ DANGER

HOT GLASS WILL CAUSE BURNS.
DO NOT TOUCH GLASS UNTIL COOLED.
NEVER ALLOW CHILDREN TO TOUCH GLASS.

A barrier designed to reduce the risk of burns from the hot viewing glass is provided with this appliance and shall be installed for the protection of children and other at-risk individuals.

NATIONAL FIREPLACE INSTITUTE
NFI
CERTIFIED
www.nficertified.org

We suggest that our gas hearth products be installed and serviced by professionals who are certified in the U.S. by the National Fireplace Institute® (NFI) as NFI Gas Specialists.

GAS-FIRED
c UL us
LISTED

UL FILE NO. MH30033

This fireplace is design certified in accordance with American National Standard/CSA Standard ANSI Z21.88/CSA 2.33 and by Underwriters Laboratories as a Direct Vent Gas Fireplace Heater and shall be installed according to these instructions.

TABLE OF CONTENTS

SECTION	PAGE
Standard Work Checklist	3
Before You Start	4-5
Carton Contents And Hardware	6
Introduction	7
Homeowner Reference Information	7
Specifications	8
Accessories	8
Fireplace Dimensions	9
Blower Installation	10-11
Clearances	12
Vent Termination Clearances	13-14
Gas Supply	15
Locating Fireplace	16
Electrical Considerations	16
Component Wiring Diagram	17
Installation	18-21
Vent Framing	22-23
Vent System Identification	24
Special Vent Systems	24
Venting Fireplace	26-27
Horizontal Termination	28
Vertical Termination	29-31
DVVK 5F Flex Vent Instructions	32-33
Air Shutter Adjustment	34
Control System Troubleshooting	36-37
Accessing Valve Compartment	38
Testing Gas Supply	39
Parts List	40
Exploded View	41
Maintenance And Service	42-43
Important Safety Information	44
Requirements For Massachusetts	45
Master Parts Distributor List	46
How To Order Repair Parts	46
Warranty	47
Multifunction Remote Operating Instructions	See Homeowners Manual

ATTENTION INSTALLER:

Follow This Standard Work Checklist

This standard work checklist is to be used by the installer in conjunction with, not instead of, the instruction manual.

Customer: _____ **Date Installed:** _____

Lot/Address: _____ **Fireplace Location:** _____

_____ **Installer:** _____

Model: DVCT(36,40)CBP95(N,P)-2 **Dealer Phone #:** _____

Serial # _____ _____

		COMMENTS
FIREPLACE INSTALLATION		
Verified clearances to combustibles. (pg. 12)	☐	_____
Fireplace is leveled and secured.	☐	_____
VENTING/CHIMNEY/PowerFlow™ HEAT DISTRIBUTION		
Venting configuration complies to vent diagrams. (pg. 27)	☐	_____
Venting installed, locked, secured in place with correct clearance.	☐	_____
Firestops installed.	☐	_____
Exterior wall/roof flashing installed and sealed.	☐	_____
Terminations installed and sealed. (pgs. 28-31)	☐	_____
Light unit and test venting before enclosing the fireplace.	☐	_____
ELECTRICAL (pgs. 16-17)		
Unswitched power (110-120 VAC) provided to the appliance.	☐	_____
GAS (pg. 15)		
Proper appliance for fuel type.	☐	_____
Was a conversion performed?	☐	**Yes** ☐ **No**
Leak check performed and inlet pressure verified	☐	_____
FINISHING (pg. 19)		
Non-combustible board used as required	☐	_____
Verified all clearances meet installation manual requirements.	☐	_____
Mantels and wall projections comply with installation manual requirements.	☐	_____
Granite or Clean Face finishing complete and complies with clearance requirements in installation manual.	☐	_____
Barrier screen for glass properly installed.	☐	_____
FIREPLACE SETUP		
All packaging and protective materials removed (inside & outside of appliance)	☐	_____
Media installed correctly.	☐	_____
Firebox glass assembly cleaned, installed, and secured.	☐	_____
Accessories installed properly.	☐	_____
Manual envelope and all of its contents are removed from inside/outside the appliance and given to party responsible for use and operation.	☐	_____
Started Appliance and verified no gas leaks exist.	☐	_____

Empire recommends the following:

- Photograph the installation and copying this checklist for your file.
- Keep this checklist visible on the fireplace until the installation is complete.

Comments: Further description of the issues, who is responsible (Installer/Builder/Other, etc) and corrective action needed:

_____

Comments communicated to party responsible _____ by _____ on _____

BEFORE YOU START

Samples, Warnings, and Definitions:

⚠ DANGER
Indicates a hazardous situation which, if not avoided, will result in death or serious injury.

⚠ WARNING
Indicates a hazardous situation which, if not avoided, could result in death or serious injury.

⚠ CAUTION
Indicates a hazardous situation which, if not avoided, could result in minor or moderate injury.

NOTICE: Addresses practices not related to personal injury.

Read all instructions before starting installation and follow them carefully to ensure safety. Failure to follow the instructions will void the warranty and may cause a fire hazard.

The warranty will be voided by, and the warranter disclaims any responsibility for the following actions:

- Installation by anyone other than the dealer or his agent.
- Installation of any damaged fireplace or component.
- Modification of the fireplace or direct vent system.
- Installation other than as instructed by Empire Comfort Systems.
- Improper positioning of logs, glass door, or accessories.
- Installation and/or use of any component part not manufactured or approved by Empire Comfort Systems.

All correspondence should refer to complete Model Number, Serial Number and type of gas. Fill out the Homeowner Reference Section on **(Page 5).**

Unpacking The Fireplace

1. Remove the outer boards/crate by removing screws.
2. Cut away shrink-wrap material around the unit. Retain instruction manual and instruction sheets.
3. Remove (2) screws securing unit to pallet.
4. Get help to lift unit off of the pallet using the handles.
5. Remove non-combustible board from the pallet and place in a safe location. It will be needed for installation.
6. Logs may remain in unit until installation in wall. Instruction sheet from step #2 shows how to remove barrier screen and glass door.

Television Considerations

Installing a television above a fireplace has become increasingly popular; however, the area above any fireplace gets hot and most TV manufacturers recommend against placing their products near a heat source.

If you install a television above this fireplace, Empire Comfort Systems accepts no responsibility for damage or injuries. Follow the television manufacturer's installation instructions, including any recommendations regarding proximity to heat sources.

If you have a TV above your fireplace, turn off the fireplace and let it cool completely before servicing or touching any buttons on the TV.

BEFORE YOU START (CONT'D)

Preparation

This fireplace and its components are safe when installed in accordance with this Manual. Report any parts damaged in shipment to your dealer. Do not install the fireplace with damaged, incomplete or substitute parts.

Installation Considerations

- Gas supply piping – right side entrance
- Electrical supply and connections
- 120V, 60Hz, 1 Amp
- Right side entrance
- Allowable fireplace mounting surfaces:
- A flat, hard, combustible or non-combustible surface
- A raised platform of combustible or non-combustible material.
- The four corners of the fireplace onto non-combustible material so that contact is made on all four perimeter edges on the bottom of the fireplace – such as on cinder blocks (where allowed by local codes).
- If the fireplace is installed directly on carpeting, tile or other combustible material other than wood flooring, it should be installed on a metal or wood panel extending the full width and depth of the fireplace.
- This fireplace is designed to be installed in a zero-clearance enclosure. Combustible material can come in contact with the side standoff spacers, and the fireplace can be secured to combustible framing with the framing brackets provided with the fireplace.

Planning the installation

First determine where the fireplace will be located and what accessories will be installed.

Your location must allow for:

- Venting – either vertical or horizontal. Choose a vent configuration, **(See Pages 28-31)** and make sure the required access through attics and walls is not blocked by other utilities such as water lines, sewer vents, gas lines, etc. If access is blocked, you will need to move the utilities or relocate the fireplace.
- Gas supply piping (right side entrance) – see pipe size and specs on **(Page 15)**.
- Electrical supply requirements (120V, 60Hz, 1 Amp) (right side entrance)
- Proper framing required for installation of the fireplace. See framing dimensions on **(Page 18)**.
- Finishing the fireplace – drywall thickness, tile or stone thickness, and the desired decorative accessories can affect how you frame the opening and how you attach the nailing flanges to set the proper depth. **(See Page 19)** for finishing details, before you begin.

Accessories

Most accessories install much more easily before fitting the fireplace to the opening.

For example, it takes just 10-15 minutes to install the blower through the back of the unit. Once the fireplace is framed in, it takes up to an hour.

TrueFlame Technology

This fireplace is equipped with TrueFlame Technology for maximum flames and ember glow with minimum emissions. The system includes independently controlled front and rear burners set into a large ember bed plus a ceramic catalyst and externally adjustable baffle mounted at the top. Once adjusted by the dealer/technician at installation, the TrueFlame system requires no scheduled service.

CARTON CONTENTS AND HARDWARE

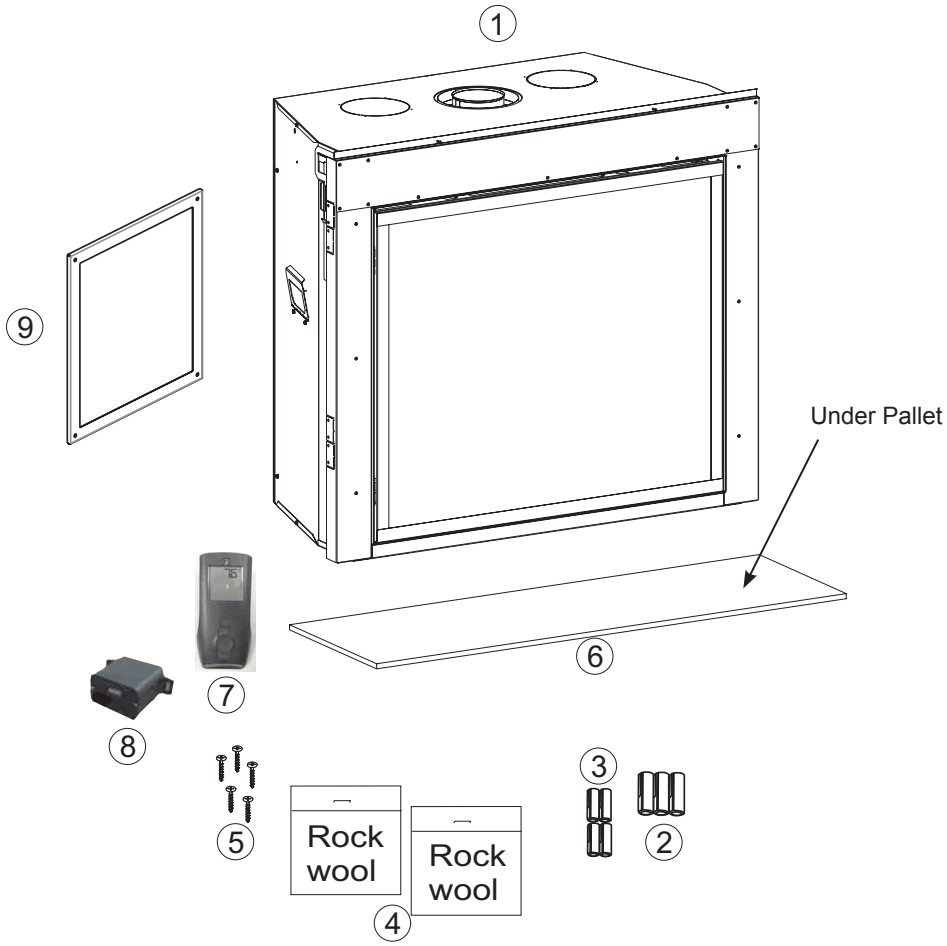

IMAGE NOT TO SCALE

NOTICE: Re-Install Screws After Unpack

CARTON CONTENTS		
INDEX NUMBER	**DESCRIPTION**	**QUANTITY SUPPLIED**
1	Unit	1
2	AAA Batteries	3
3	AA Batteries	4
4	Rockwool	2 Bags
5	Drywall Screws	5
6	Non-Combustible Board (on pallet)	1
7	Remote	1
8	Battery Holder & Switch	1
9	Wall Thimble Spacer	1

See Parts Lists on page 61 for ordering replacement parts. Do not order batteries, bolts, screws, washers or nuts. They are standard hardware items and can be purchased at your local hardware store.

INTRODUCTION

The information in this manual pertains to all models and gas control systems unless otherwise noted.

Instructions to Installer

1. Leave this manual with Homeowner.
2. Have the homeowner complete the Product Registration Card or register online at www.empirecomfort.com
3. Show the homeowner how to start and operate the fireplace.

Notes to Installer

- This fireplace is designed to:
  - Operate with combustion air siphoned from outside of the building.
  - Expel all exhaust gases to the outside of the building.
- The installation must conform with local codes or, in the absence of local codes, with the National Fuel Gas Code ANSI Z223.1/NFPA 54* Natural Gas and Propane Installation Code, or CSA B149.1 in Canada. * Available from the American National Standards Institute, Inc. 11 West 42nd St., New York, N.Y. 10036
- Any alteration of the original design, installation other than as shown in these instructions, or use with a type of gas not shown on the rating plate is the responsibility of the person and company making the change.
- This fireplace is not for use with solid fuels.
- These fireplace models may be installed in a bedroom or bed-sitting room in the U.S.A. and Canada.

⚠ WARNING

Any change to this fireplace can be dangerous. Improper installation or use can cause serious injury or death from fire, burns, explosion or carbon monoxide poisoning.

Fireplace Certification

This fireplace is design certified in accordance with American National Standard/CSA Standard ANSI Z21.88/CSA 2.33 and by Underwriters Laboratories as a Direct Vent Gas Fireplace Heater and shall be installed according to these instructions.
Consult your local building code agency, prior to installation, to ensure compliance with local codes-including permits and inspections.

The fireplace, when installed, must be electrically grounded in accordance with local codes or, in absence of local codes, with the National Electric Code ANSI/NFPA 70 or Canadian Electric code, CSA C22.1, if an external electrical source is utilized.

Qualified Installing Agency

Installation and replacement of gas piping, gas utilization equipment or accessories and repair and servicing of equipment shall be performed only by a qualified agency. The term “qualified agency” means any individual, firm, corporation or company which either in person or through a representative is engaged in and is responsible for (a) the installation or replacement of gas piping or (b) the connection, installation, repair or servicing of equipment, who is experienced in such work, familiar with all precautions required and has complied with all the requirements of the authority having jurisdiction.

Commonwealth of Massachusetts: The installation must be made by a licensed plumber or gas fitter in the Commonwealth of Massachusetts.

High Altitude (USA)

When installing this fireplace at an elevation above 2000 feet (in the United States) it may be necessary to decrease the input rating by changing the existing burner orifice to a smaller size. Generally, input should be reduced 4 percent for each 1000 feet above sea level. However, if the heating value of the gas has been reduced, this general rule may not apply. Check with Empire Comfort System’s local gas utility for proper orifice size identification.

High Altitude (CANADA)

Altitude: 0-4500 feet (0-1370 m)
When installing this fireplace at an elevation above 4500 feet (in Canada), check with local authorities.
Consult your local gas utility for assistance in determining the proper orifice for your location.

HOMEOWNER REFERENCE INFORMATION

We recommend that you record the following information about your fireplace.

Model Number: _____ Date purchased: _____

Serial Number: _____ Location of fireplace: _____

Dealer Name: _____ Dealer Phone: _____

Notes: _____

SPECIFICATIONS

MODEL NUMBER	DVCT36NAT	DVCT36LP	DVCT40NAT	DVCT40LP
Input BTU/Hr Maximum (w/ both burners on)	40,000	40,000	47,500	45,000
Input BTU/Hr Minimum (w/ both burners on)	26,000	33,000	30,000	35,000
Input BTU/Hr Minimum (front burner on only)	11,000	13,000	15,000	16,500
KWH (Maximum)	11.72	11.72	13.92	13.19
KWH (Minimum)	7.62	9.67	8.79	10.26
Orifice - Front	#48	#56	2.25mm	#56
Orifice - Rear	2.40mm	1.45mm	2.45mm	1.55mm
Air Shutter Opening Front	Full Closed	Full Opened	Full Closed	Full Opened
Air Shutter Opening Rear	Full Closed	Full Opened	1/8 Closed	Full Opened
Height without standoff (inches)	40-3/4	40-3/4	42-3/4	42-3/4
Width (inches)	45	45	49	49
Depth (inches)	22-1/8	22-1/8	24	24
Gas Inlet Shutoff Valve (pipe)	1/2 NPT	1/2 NPT	1/2 NPT	1/2 NPT

NOTE: Air shutter is at factory-minimum settings. Some vent configurations may require minor air shutter adjustments for optimum performance.

GAS SUPPLY PRESSURES (Inches Water Column)			
Gas Type	**Maximum**	**Minimum**	**Manifold**
Natural	14	4.5	3.5
Propane	14	10.8	10

VENTING	LIGHT BULB REPLACEMENT
5 x 8 Direct Vent System	35w Clear Halogen, Bi-Pin 6.35mm base,120vac, UL

ACCESSORIES

The following accessory parts can be obtained from your Empire Comfort Systems dealer. For additional information beyond what your dealer can furnish, contact Empire Comfort Systems Inc., 918 Freeburg Ave., Belleville, Illinois 62220-2623.

MODEL NUMBER		DESCRIPTION
DVCT36	**DVCT40**	
DVP36P...	**DVP40P...**	A liner is required. Contact your Empire Comfort Systems Dealer for available liner.
FBB21	FBB21	Blower, Auto Variable-Speed - Twin
DF36CNB	DF402NB	Beveled Window Frame 1.5-inch, (Brushed Nickel)
DFF36FPD	DFF40FPD	Decorative Front, Forged Iron Frame, Distressed Pewter
DFF36RPD	DFF40RPD	Decorative Arch Insert, Forged Iron, Distressed Pewter
DFF36CPD	DFF40CPD	Decorative Rectangle Insert, Forged Iron, Distressed Pewter (Requires DFF40FPD)
DDF36CPD	DDF40CPD	Decorative Door Set, Forged Iron, Traditional, Distressed Pewter
DCA1ABL	DCA1ABL	Andirons, Black

MODEL NUMBER		CONVERSION KITS
DVCT36	**DVCT40**	**DESCRIPTION**
37506	36884	Conversion Kit, IP System Natural to Propane
37507	36885	Conversion Kit, IP System Propane to Natural Gas

LOG SETS		
MODEL NUMBER		**DESCRIPTION**
LS36...	**LS40...**	A Log Set is required. Contact your Empire Comfort Systems Dealer for available log set.

** A liner kit and log set must be purchased and installed in order to operate the unit.*

FIREPLACE DIMENSIONS

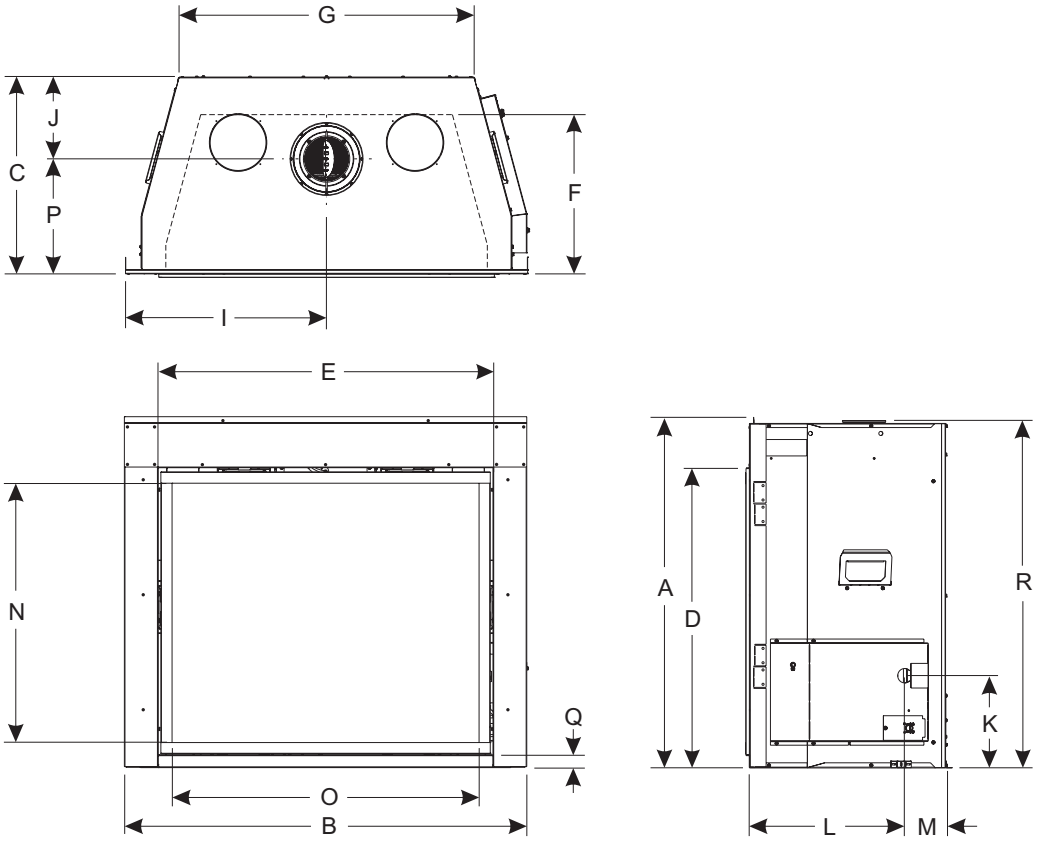

Figure 1

INDEX LETTER	DIMENSION DESCRIPTION	DIMENSIONS (In Inches)	
		DVCT36	DVCT40
A	The maximum height of fireplace face	40 3/4	42 3/4
B	The maximum width of the fireplace face	45	49
C	The maximum depth of the fireplace	22 1/8	24
D	The height of the fireplace opening	34 1/2	36 1/2
E	The width of the fireplace opening	36 7/8	40 7/8
F	The interior depth of the fireplace	17 1/4	16 7/8
G	The rear exterior width of the fireplace	33	36 1/8
H	The height to the fireplace standoffs	N/A	N/A
I	Width from the left side to the centerline of vent	22 1/2	24 1/2
J	Depth from back to centerline of top vent	10 1/8	10 1/16
K	Height from the bottom to the gas line opening	11 1/4	11 1/4
L	Depth from the front to gas line opening	17	19 3/8
M	Depth from rear to gas line opening	5 1/8	5 3/16
N	Glass height	28 3/8	30 3/8
O	Glass width	31 3/4	36
P	Depth from front to centerline of vent	12	14
Q	Distance from floor to fireplace opening	1 1/2	1 1/2
R	Height from floor to vent collar	40 5/16	42 5/16

N/A - Not applicable for this unit.

BLOWER INSTALLATION

⚠ CAUTION

Sharp edges. Use protective gloves when installing.

Bench Installation

1. Remove Blower Access Panels. **See Figure 2.**

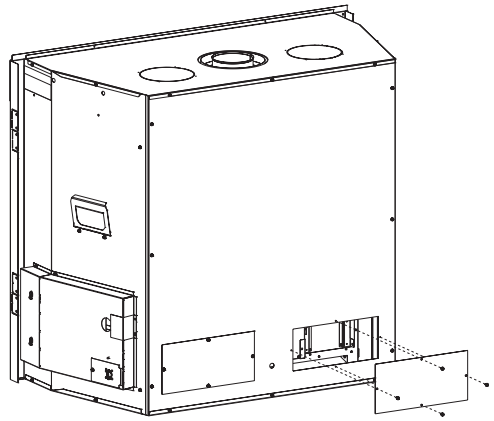

Figure 2

2. Place Blowers onto blower brackets. **See Figure 3.**

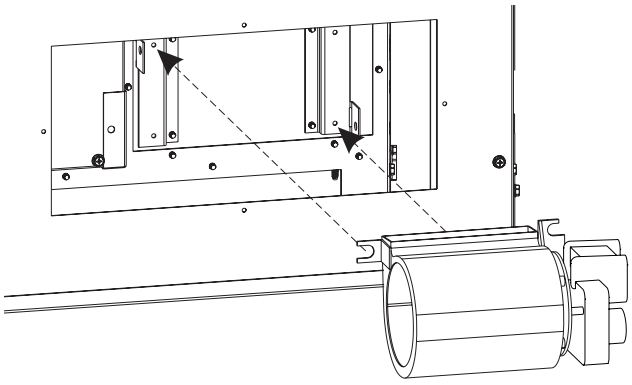

Figure 3

3. Bend tab as shown in **Figure 4** and secure with (2) screws.

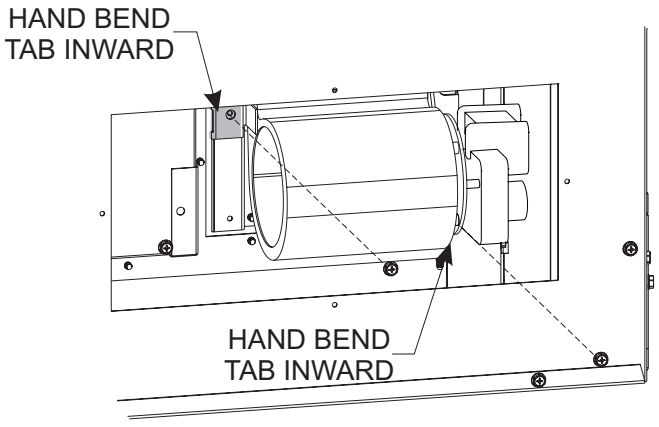

Figure 4

4. Remove protective connectors on Wire Assembly from fireplace and discard. Connect Wire Harness to both blowers and the other end to the Wire Assembly supplied with the fireplace. **See Figure 5.**

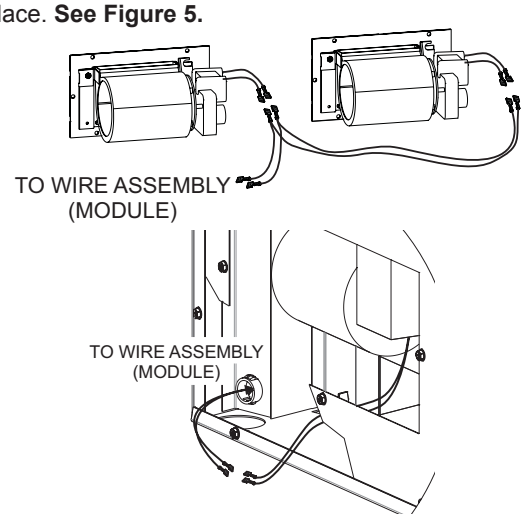

Figure 5

5. Replace Blower Access Panels removed in step 1. **See Figure 1.**

Installation After Placement of Unit in Wall

1. Remove the following items. **See Figure 6.**
   - Screen barrier *(See Homeowner's Manual, Maintenance and Service).*
   - Glass Frame Assembly *(See Homeowner's Manual, Maintenance and Service).*
   - Liners *(See separate liner instruction document).*

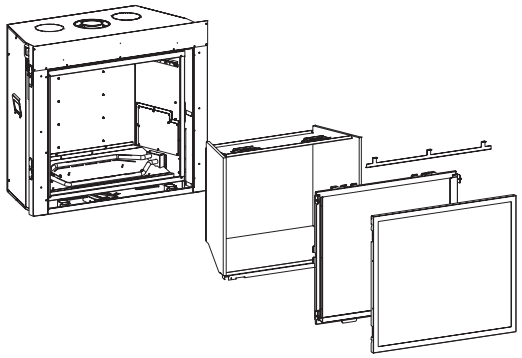

Figure 6

2. Remove front and rear burner. **See Figure 7.**

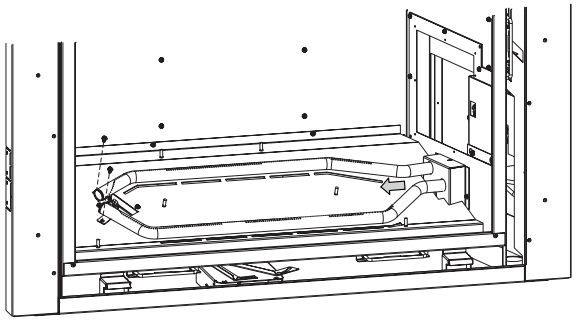

Figure 7

BLOWER INSTALLATION (CONT'D)

3. Remove burner base. **See Figure 8.**

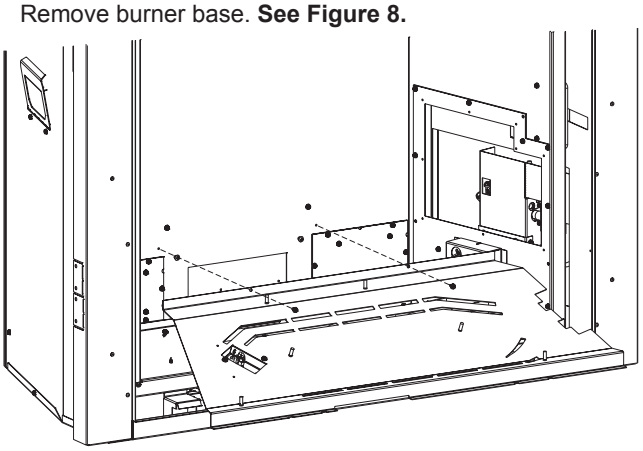

Figure 8

4. Remove Blower Brackets by taking out (6) screws each. **See Figure 9.**

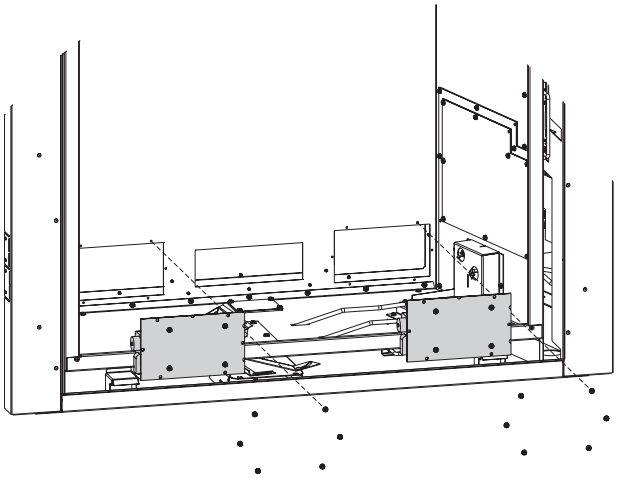

Figure 9

5. Place Blower onto Blower Brackets. **See Figure 10.**

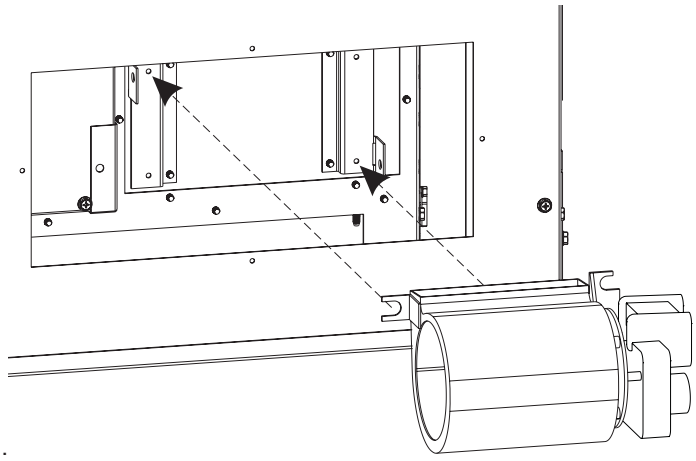

Figure 10

6. Bend tab as shown in **Figure 11** and secure with (2) screws.

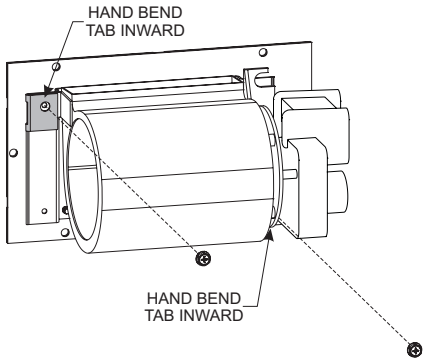

Figure 11

7. Remove protective connectors on Wire Assembly from fireplace and discard. Connect Wire Harness to both blowers and the other end to the Wire Assembly supplied with the fireplace. **See Figure 12.**

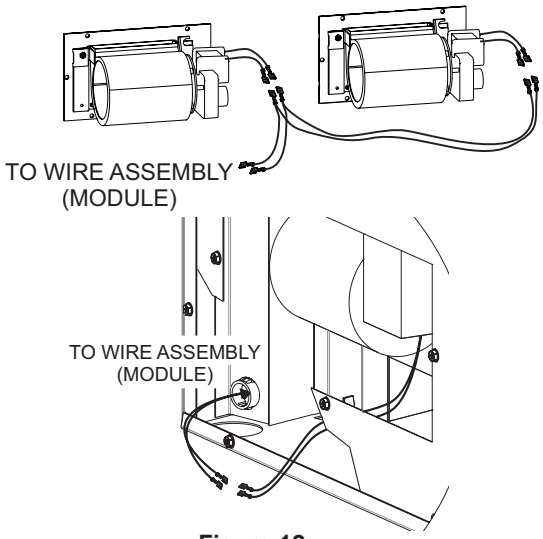

Figure 12

8. Replace Blower Bracket (w/ blowers attached) with (6) screws each. **See Figure 13.**

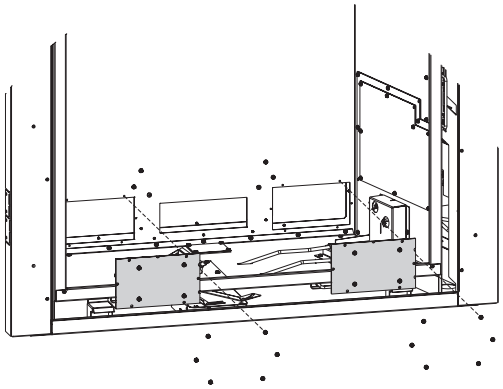

Figure 13

9. Replace Glass Frame, Screen Barrier, and liners removed in Step 1, **Figure 6.**

CLEARANCES

CLEARANCE TO COMBUSTIBLES DIMENSIONS (In Inches)	
Back	0
Side	2
Floor	0
Top of Unit	36
Top Framing Edge	0

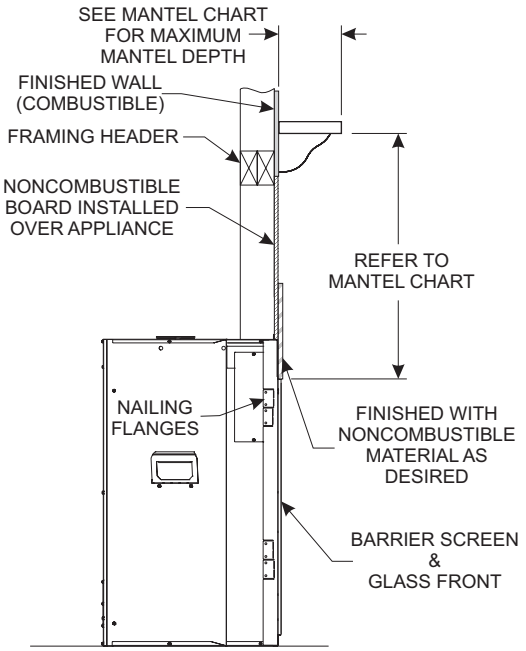

Figure 14

NOTICE: Use only non-combustible materials to finish the face of the fireplace.

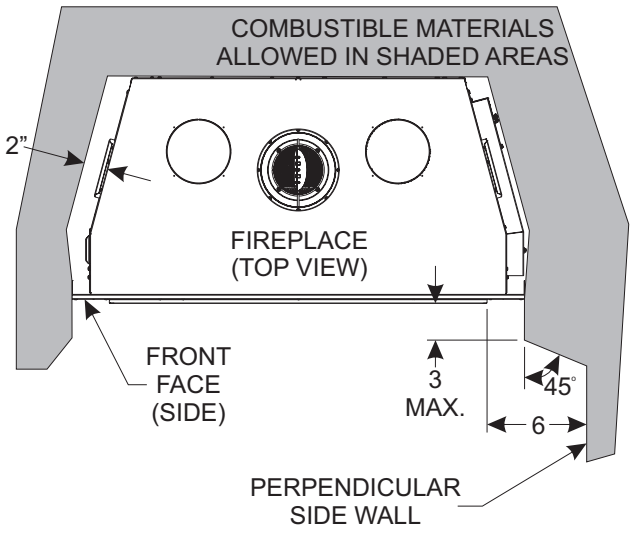

Figure 15

Mantel Chart

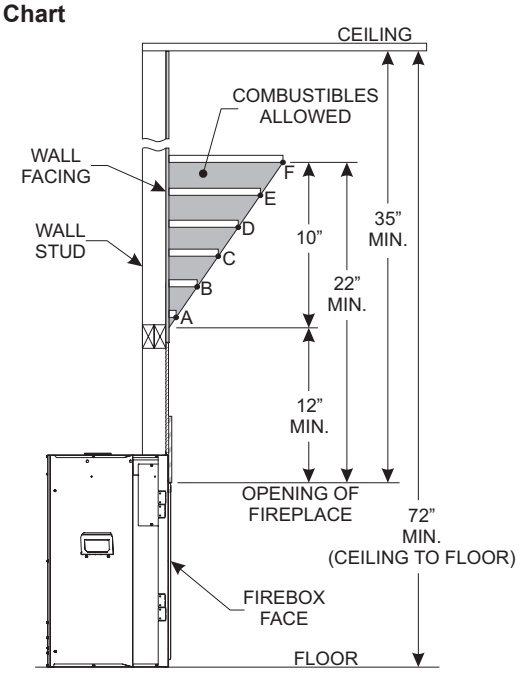

INDEX LETTER	DISTANCE FROM WALL FACING	DISTANCE FROM TOP OF OPENING
	Dimensions (In Inches)	
A	2	12
B	4	13-5/8
C	6	15-5/16
D	8	17
E	10	18-5/8
F	12	22

Figure 16

Clearances

Clearance from top opening of fireplace to ceiling is 35 inches.
Clearance from opening to adjacent sidewall is 6 inches.

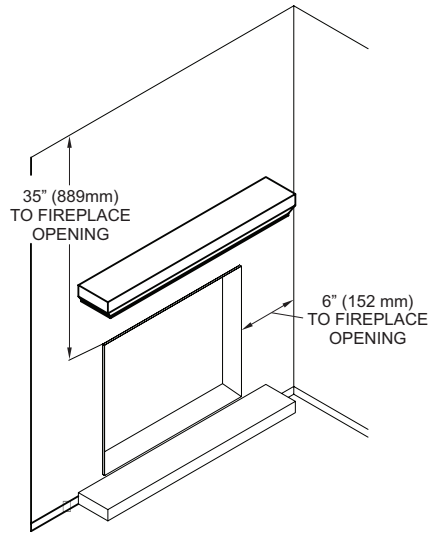

Figure 17

VENT TERMINATION CLEARANCES

Termination clearance for buildings with combustible and noncombustible exteriors.

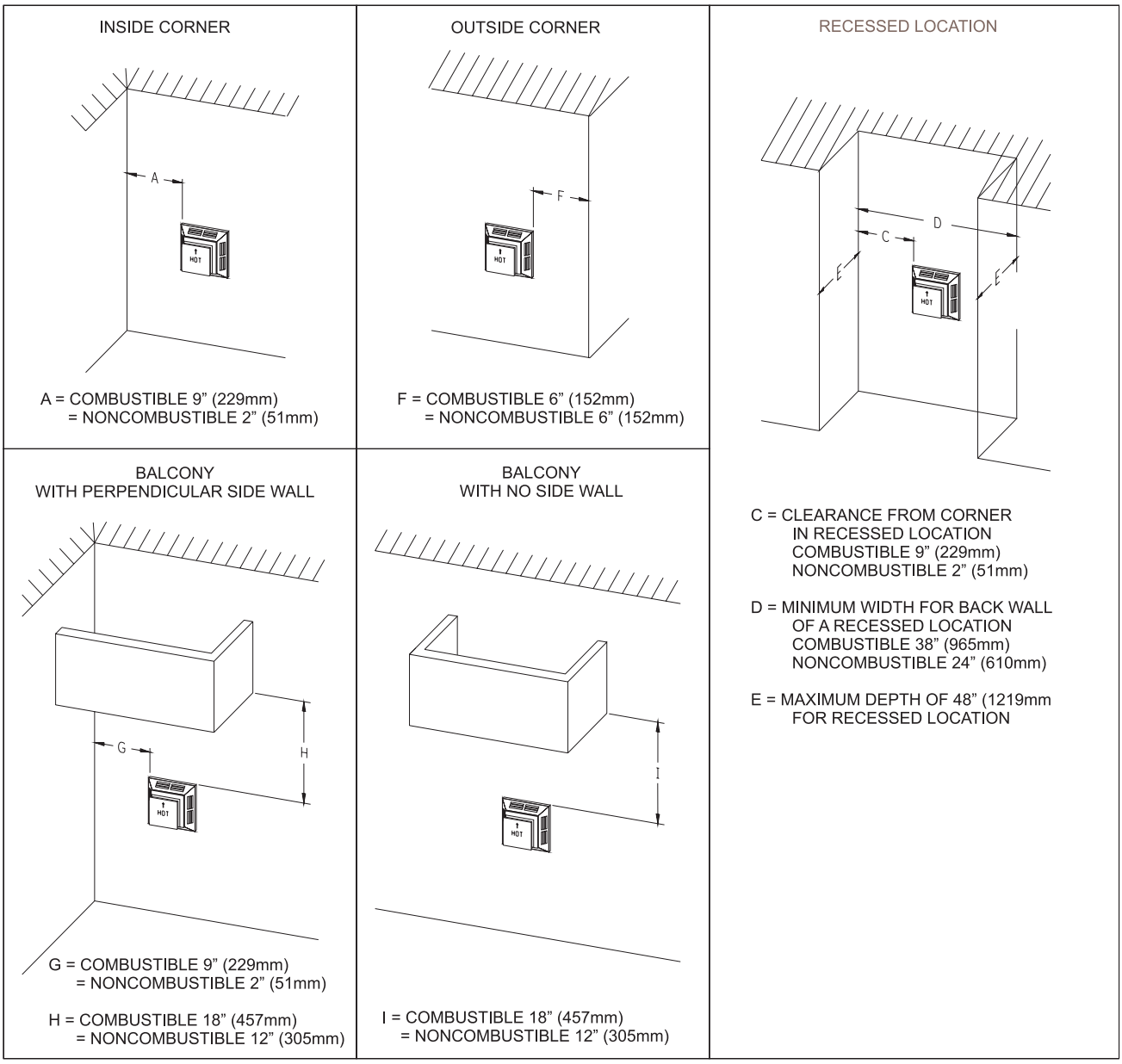

Figure 18

Vertical Sidewall Installations

Important! Minimum clearance between vent pipes and combustible materials is 3 inch (76 mm) on top, and 1 inch (25 mm) on bottom and sides.

Important! When vent termination exits through foundation less than 20 inch (508 mm) below siding outcrop, the vent pipe must extend outward so that the horizontal vent termination is located flush to, or beyond the outcrop siding.

Information on Various Venting Routes and Components

Important: Locate the fireplace in such a way that minimizes the number of offsets and horizontal vent length.

Since it is very important that the venting system maintain its balance between the combustion air intake and the flue gas exhaust, certain limitations as to vent configurations apply and must be strictly adhered to.

The graph showing the relationship between vertical and horizontal side wall venting will help to determine the various vent lengths allowable.

The horizontal vent run refers to the total length of vent pipe from the flue collar of the fireplace to the face of the outer wall.

Venting termination shall not be recessed into wall or siding.

ATTENTION: Vinyl Soffit, Vinyl Ceiling, Vinyl Overhang Disclaimer

Clearances are to heat resistant material (i.e. wood, metal). This does not include vinyl. Empire Comfort Systems Inc. will not be held responsible for heat damage caused from terminating under vinyl overhangs, vinyl ceilings or vinyl ventilated/unventilated soffits.

VENT TERMINATION CLEARANCES (CONT'D)

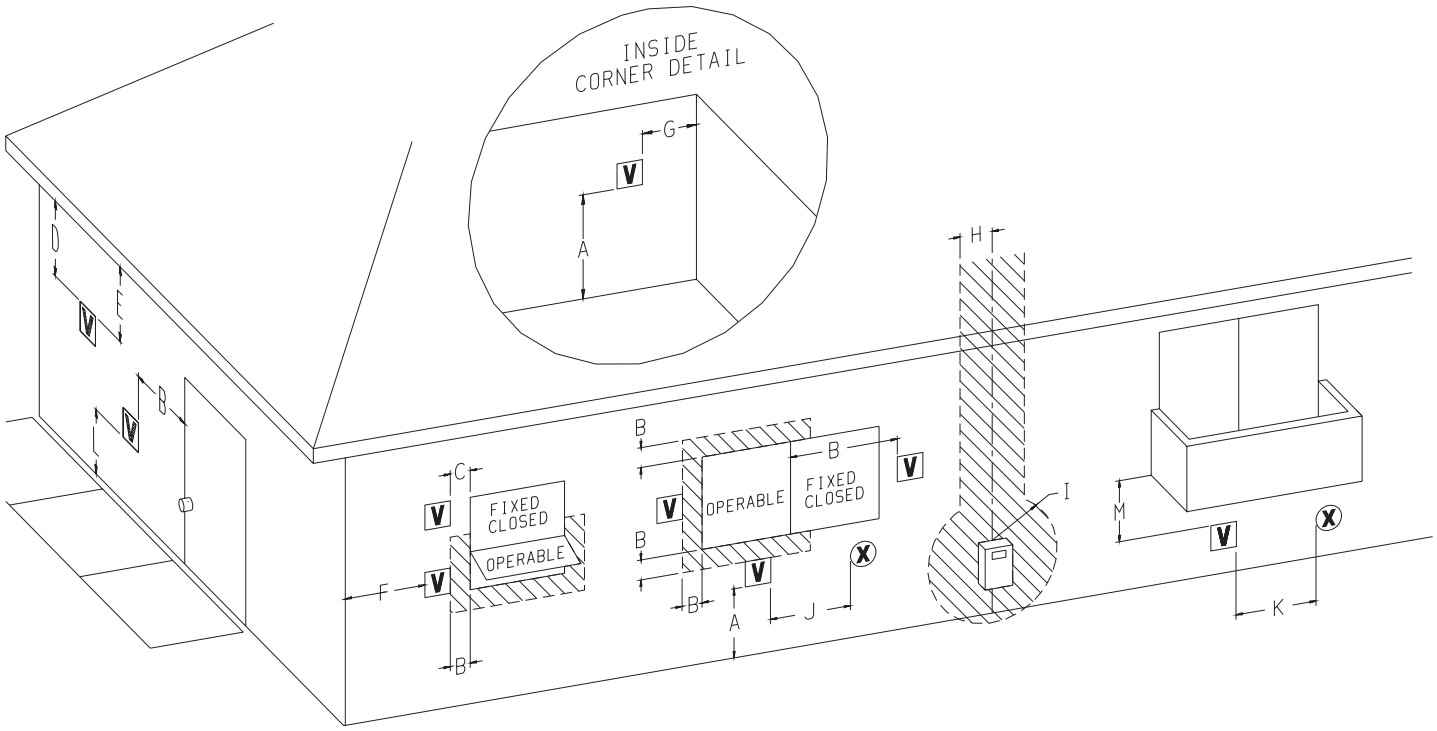

V VENT TERMINAL X AIR SUPPLY INLET AREA WHERE TERMINAL IS NOT PERMITTED

	Canadian Installations1	US Installations2
A= Clearance above grade, veranda, porch, deck, or balcony	12-in (30cm)	12-in (30cm)
B= Clearance to window or door that may be open	12-in (30cm) for appliances > 10,000Btuh (3kW) and ≤ 100,000 Btuh (30kW)	9-in (23cm) for appliances > 10,000Btuh (3kW) and ≤ 50,000 Btuh (15kW)
C= Clearance to permanently closed window	12-in (30cm)	12in (30cm)
D= Vertical clearance ventilated soffit located above the terminal within a horizontal distance of 2 feet (61cm) from the center line of the terminal	18-in	18-in
E= Clearance to unventilated soffit	18-in	18-in
F= Clearance to outside corner	See previous page.	
G= Clearance inside corner	See previous page.	
H= Clearance to each side of center line extended above meter/regulator assembly	3ft (91cm) within a height 15ft (4.5m) above the meter/regulator assembly	3ft (91cm)

ATTENTION: Vinyl Soffit, Vinyl Ceiling, Vinyl Overhang Disclaimer

Clearances are to heat resistant material (i.e. wood, metal). This does not include vinyl. Empire Comfort Systems Inc. will not be held responsible for heat damage caused from terminating under vinyl overhangs, vinyl ceilings or vinyl ventilated/unventilated soffits.

	Canadian Installations1	US Installations2
I= Clearance to service regulator vent outlet	3ft (91cm)	61-in
J= Clearance to non-mechanical air supply inlet to building or the combustion air inlet to any other appliance	12-in (30cm) for appliances > 10,000 Btuh (3kW) and ≤ 100,000 Btuh (30kW)	9-in (23cm) for appliances > 10,000Btuh (3kW) and ≤ 50,000Btuh (15kW)
K= Clearance to a mechanical air supply inlet	6ft (1.83m)	3ft (91cm) above if within 10ft (3m) horizontally
L= Clearance above paved sidewalk or paved driveway located on public property	7ft (2.13m) †	7ft (2.13m)
M= Clearance under veranda, porch deck, or balcony	12-in (30cm) ‡	12-in (30cm)

1	In accordance with the current CSA B149.1, Natural Gas and Propane Installation Code
2	In Accordance with the current ANSI Z223.1/NFPA 54, National Fuel Gas Code
†	A vent shall not terminate directly above a sidewalk or paved driveway that is located between two single family dwellings and serves both dwellings
‡	Permitted only if veranda,, porch, deck, or balcony is fully open on a minimum of two sides beneath the floor.
*	For clearances not specified in ANSI Z223.1/NFPA 54 or CSA B149.1, one of the following shall be indicated:

Clearance in accordance with local installation codes and the requirements of the gas supplier.

GAS SUPPLY

The gas pipeline can be brought in through the right side of the fireplace. The fireplace has a Flexline with shut-off valve located on the left side when facing the fireplace. **See Figures 18 and 19.** Consult the current National Fuel Gas Code, ANSI Z223.1 CAN/CGA-B149 (.1 or .2) installation code.

RECOMMENDED GAS PIPE DIAMETER				
Pipe Length (Dimensions in feet)	Schedule 40 Pipe Inside Diameter		Tubing, Type L Outside Diameter	
	Dimensions (In Inches)			
	Natural	Propane	Natural	Propane
0-10	1/2	3/8	1/2	3/8
11-40	1/2	1/2	5/8	1/2
41-100	1/2	1/2	3/4	1/2
101-150	3/4	1/2	7/8	3/4

CAUTION: Never use plastic pipe. Check to confirm whether your local codes allow copper or galvanized tubing.

NOTICE: Some municipalities have additional local codes. Consult your local authority and installation code.

The use of the following gas connectors is recommended:

— ANSI Z21.24 Fireplace Connectors of Corrugated Metal Tubing and Fittings.

— ANSI Z21.45 Assembled Flexible Fireplace Connectors of Other Than All-Metal Construction

The above connectors may be used if acceptable by the authority having jurisdiction. The Commonwealth of Massachusetts requires that a flexible fireplace connector cannot exceed three feet in length.

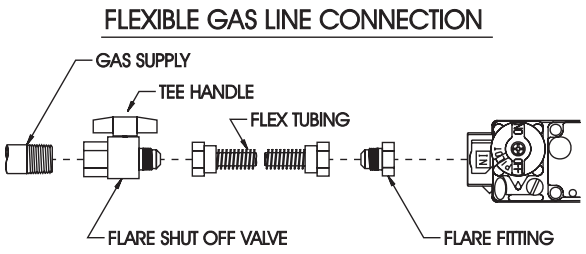

Figure 19

Installing the Main Gas Shut-Off

Each fireplace should have its own manual gas shut-off.

A manual main gas shut-off should be located in the vicinity of the fireplace and can be easily accessed. Where none exists, or where its size or location is not adequate, contact your local authorized installer for installation or relocation.

Compounds used on threaded joints of gas piping shall be resistant to the action of liquefied petroleum gases. The gas lines must be checked for leaks by the installer. Testing for leaks on all exposed connections should be done with leak test solution or a soap solution. After testing is complete, all solution should be cleaned off. On unexposed connections, a pressure test should be made.

⚠ WARNING

Never use an exposed flame to check for leaks. Fireplace must be disconnected from piping at inlet of control valve and pipe capped or plugged for pressure test. Never pressure test with fireplace connected; control valve will sustain damage.

NOTICE: The gas controls are equipped with a captured screw-type pressure test point. It is not necessary to provide a 1/8-inch test point up stream of the control.

When using copper or flex connector use only approved fittings. The fireplace and its individual shut-off valve must be disconnected from supply piping system during any pressure testing of that system at test pressures in excess of 1/2 psig (3.5kPa).

The fireplace must be isolated from the gas supply piping system by closing its individual manual shut-off valve during any pressure testing of the gas supply piping system at test pressures equal to or less than 1/2 psig (3.5kPa).

⚠ WARNING

If one of the procedures results in pressures in excess of 1/2 psig (14 inches w.c.) (3.5 kPa) on the fireplace gas valve, it will result in a hazardous condition.

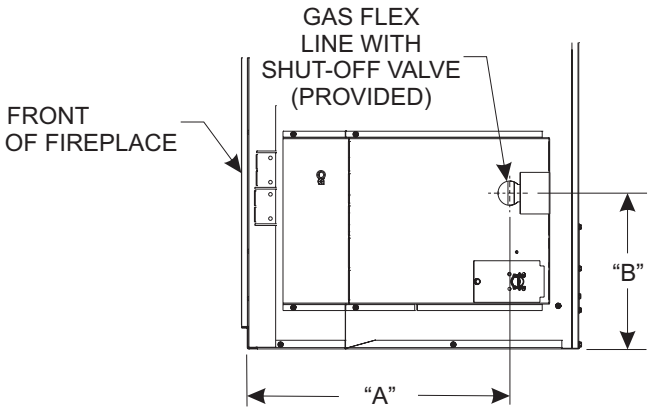

DIMENSION	DVCT36	DVCT40
A	17	19 3/8
B	11 1/4	11 1/4

Figure 20

A gas valve and ground joint union should be installed in the gas line upstream of the gas control to aid in servicing. The National Fuel Gas Code requires that a drip leg be installed near the gas inlet. **See Figure 21.** This should consist of a vertical length of pipe tee connected into the gas line that is capped on the bottom in which condensation and foreign particles may collect.

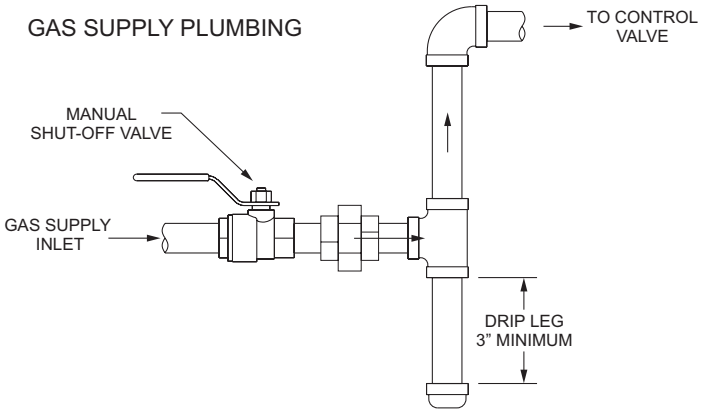

Figure 21

LOCATING FIREPLACE

NOTICE: When installing this appliance against an exterior wall, insulate to applicable insulation codes.

NOTICE: Island and Room Divider installation is possible as long as the horizontal portion of the vent system does not exceed 18 feet with a minimum vertical run of 8 feet. See details in Venting Section.

When you install your Direct Vent Fireplace in room divider or flat on wall corner positions, maintain a minimum of 6 inches between the perpendicular wall and the opening of the appliance.

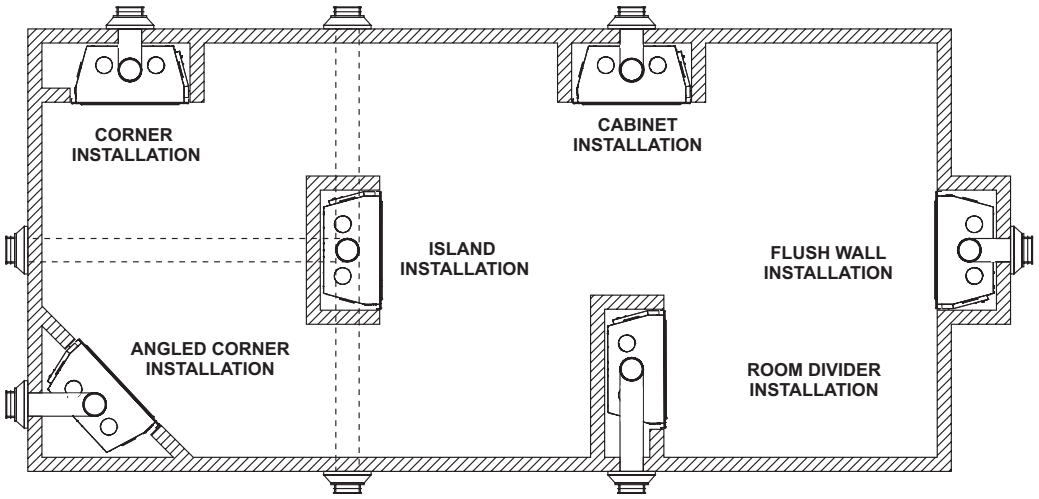

Figure 22

ELECTRICAL CONSIDERATIONS

⚠ CAUTION

All wiring should be done by a qualified electrician and shall be in compliance with all local, city and state building codes. Before making the electrical connection, make sure that the main power supply is disconnected. The appliance, when installed, must be electrically grounded in accordance with local codes, or in the absence of local codes, with the National Electrical Code ANSI/NFPA 70 (Latest Edition).

Junction Box

A factory-installed junction box is located on the lower right side of the fireplace. Wiring must be fed to the junction box and attached with wire nuts to the control module power leads already fed into the junction box.

Attach black to black and white to white. The ground wire should be attached to the ground on the junction box. **See Figure 23.**

Interface/Battery Holder

The user interface/battery holder must be mounted within a distance allowed by the attached 12 foot harness. As shipped, this harness is already fed through a strain relief on the bottom of the component access box and is attached to the User Interface/Battery Holder.

NOTICE: If an auxiliary device is to be used, its wiring may be fed through the junction box strain relief. Auxiliary device amperage limit is 5 amps.

NOTICE: A one inch diameter hole should be use to pass wiring through studs.

JUNCTION BOX CONNECTIONS

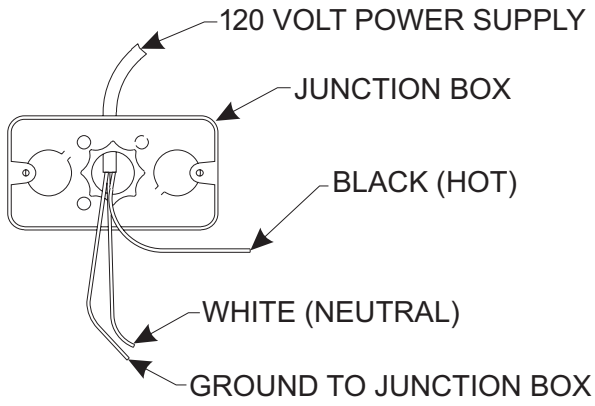

Figure 23

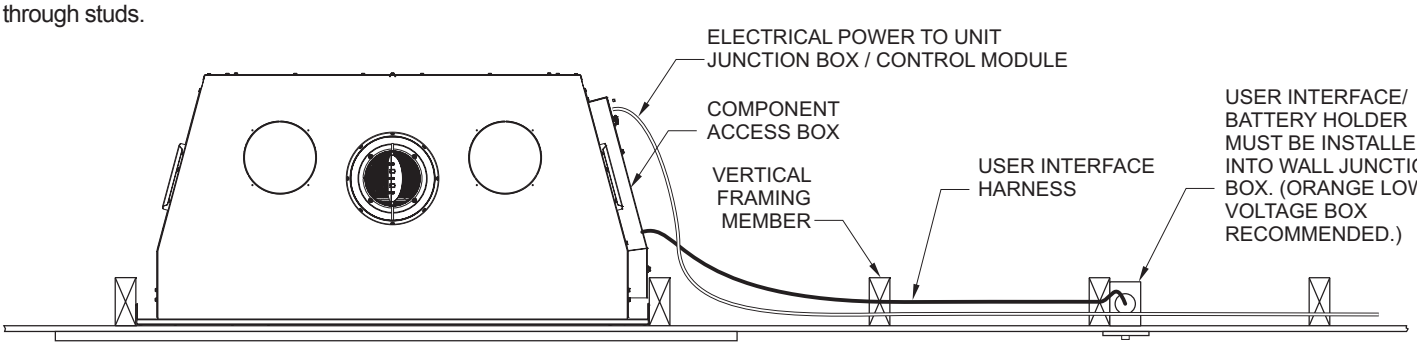

Figure 24

COMPONENT WIRING DIAGRAM

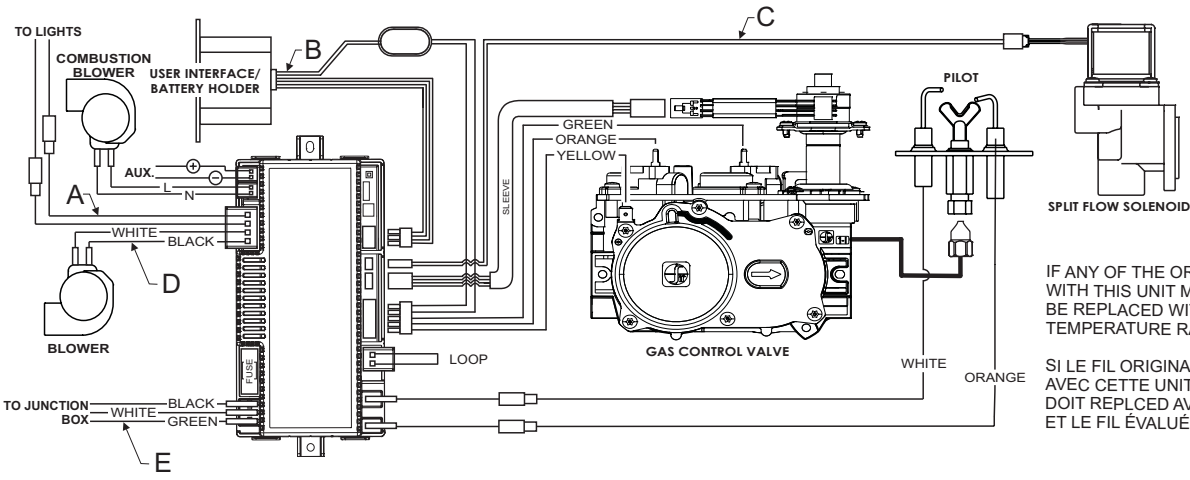

IF ANY OF THE ORIGINAL WIRE AS SUPPLIED WITH THIS UNIT MUST BE REPLACED, IT MUST BE REPLACED WITH EQUIVALENT GAUGE AND TEMPERATURE RATED WIRE.

SI LE FIL ORIGINAL L'UN DES COMME FOURNI AVEC CETTE UNITÉ DOIT ÊTRE REMPLACÉ, IL DOIT REPLCED AVEC LA MESURE ÉQUIVALENTE ET LE FIL ÉVALUÉ PAR TEMPÉRATURE.

Figure 25

INDEX NUMBER	DESCRIPTION	PART NUMBER
A	WIRE HARNESS, ACCENT LIGHT TERMINATION	R12269
B	WIRE ASSEMBLY, MODULE TO INTERFACE	R11552
C	WIRE HARNESS, PROFLAME2	R11551
D	WIRE ASSEMBLY (BLOWER)	R12256
E	WIRE HARNESS, MODULE TO JUNCTION BOX	R11730

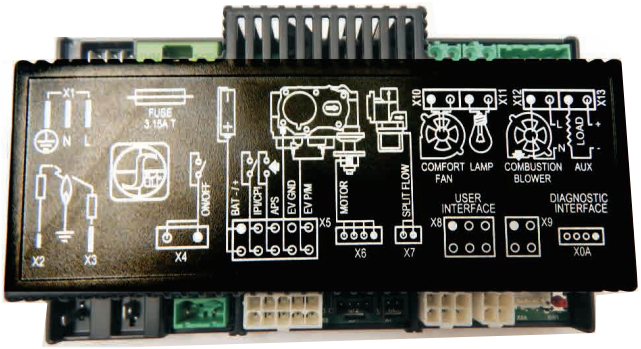

Top of Receiver Module
Figure 26

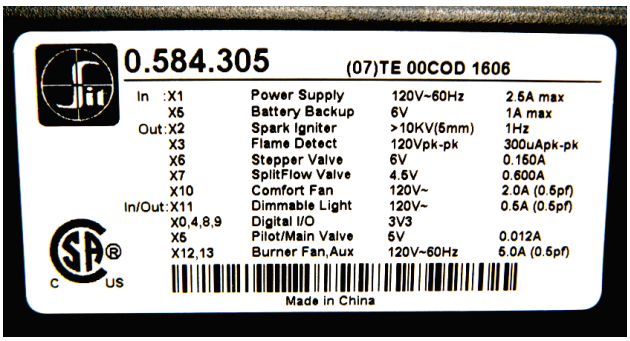

Bottom of Receiver Module
Figure 27

NOTICE
"ON DEMAND PILOT" System Operation After seven days of inactivity of the main burner, the pilot will shut off.

INSTALLATION

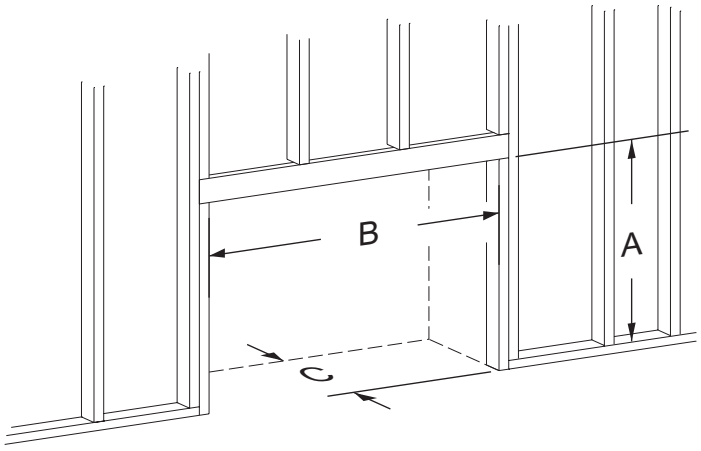

Rough Opening for Floor Level Installation

Figure 28

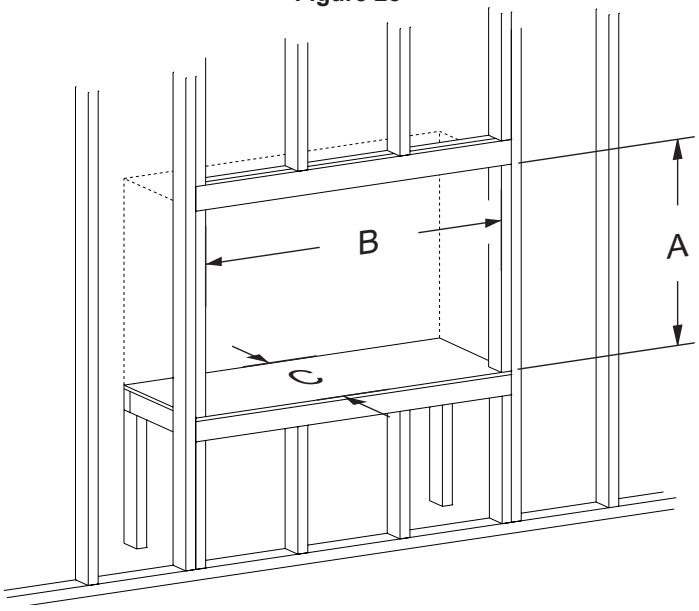

Rough Opening for Elevated Installation

Figure 29

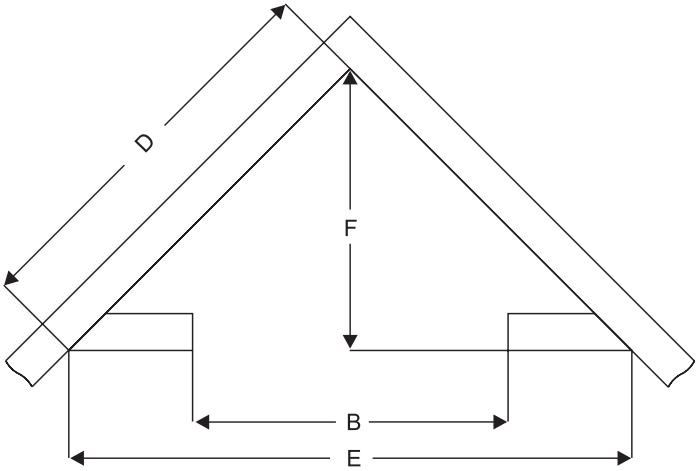

Rough Opening for Installing in Corner

Figure 30

The fireplace can be mounted on any of the following surfaces:

1. A flat, hard combustible or non-combustible surface.
2. A raised wooden platform.
3. Four corner supports. (Example: Four concrete masonry blocks.) These supports must be positioned so they contact all four perimeter edges on the bottom of the fireplace, if allowed by local codes.

NOTICE: Verify the gas supply and electrical considerations before beginning the framing.

Framing Information

Fireplace framing can be built before or after the fireplace is set in place. Position framing to accommodate wall covering and fireplace facing material. Construct the fireplace framing with 2 x 4 lumber or heavier. Refer to the **INSTALLATION TABLE** below for minimum framing dimensions.

⚠ CAUTION

Before construction begins, measure fireplace dimensions and verify framing methods and wall covering details.

INSTALLATION TABLE - MINIMUM DIMENSIONS (In Inches)						
MODEL	**A**	**B**	**C**	**D**	**E**	**F**
DVCT36CBP	53 1/2	45 1/2	22 1/8	54 11/16	77-3/8	38 11/16
DVCT40CBP	55 1/2	49 1/2	24	59 11/16	84-3/8	42 1/4

INSTALLATION (CONT'D)

NAILING FLANGES

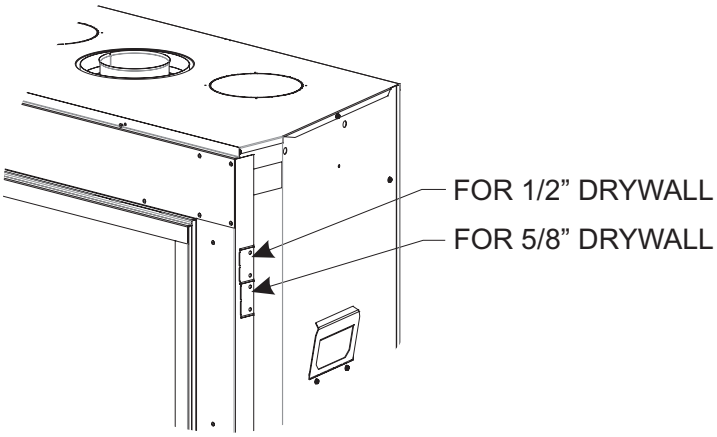

Figure 31

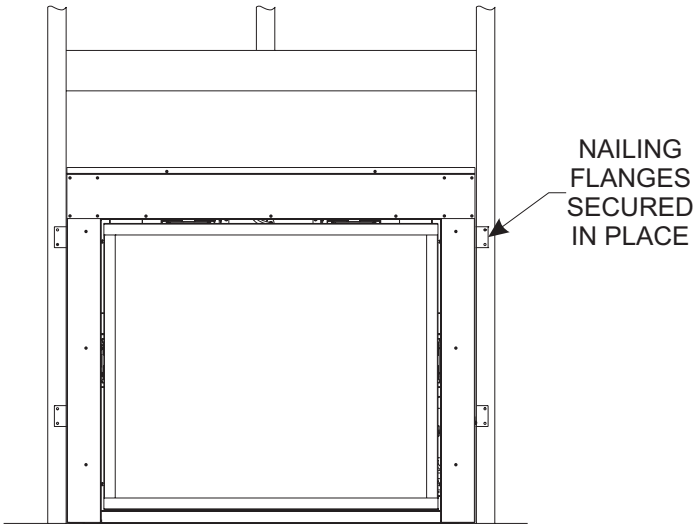

Figure 32

FLUSH WALL INSTALLATION

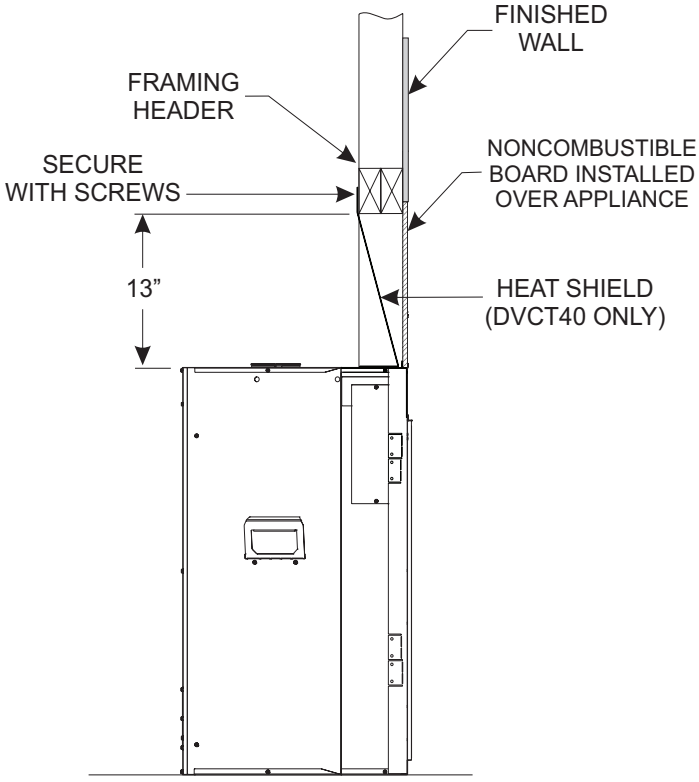

Figure 33

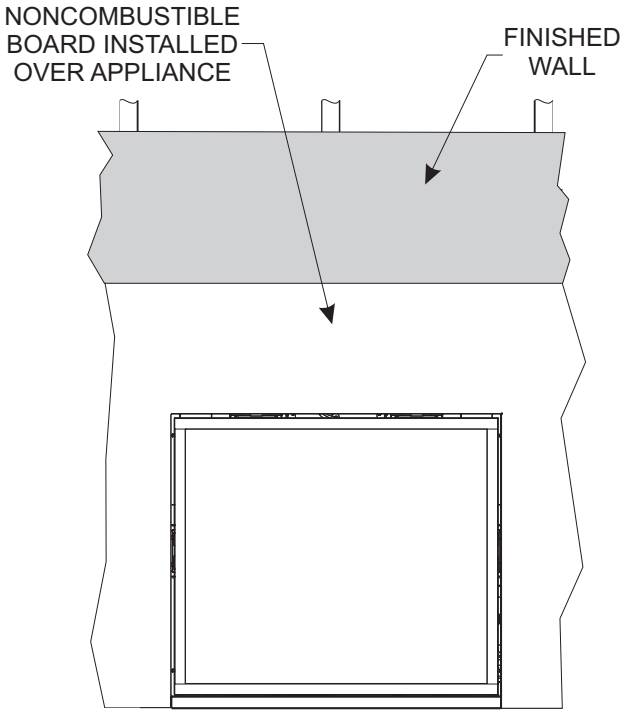

Figure 34

⚠ WARNING

When finishing the fireplace never obstruct or modify the gap around the glass frame in any manner. Provide adequate clearances around air openings into the combustion chamber.

⚠ CAUTION

If the joints between the finished wall and the fireplace surround (top and sides) are sealed, a 300°F minimum sealant material must be used. These joints are not required to be sealed. Only non-combustible material (using 300°F minimum adhesive if needed) can be applied as facing to the fireplace surround.

INSTALLATION (CONT'D)

Horizontal Vent Clearance
For horizontal vent, maintain 1 inch of clearance to the bottom and sides of vent, and 3 inches of clearance to combustibles above the vent pipe. **See Figure 36.**

Vertical Vent Clearance
For vertical vent, maintain a minimum 1 of inch clearance to combustibles.

NOTICE: Maintain 1 of inch of clearance to combustibles around vertical vent pipe. **See Figure 35.** For horizontal vent systems, maintain a minimum 1 inch of clearance from the bottom and sides of the vent to combustibles and a 3 inches of clearance above the vent pipe to combustibles. **See Figures 35 and 36.**

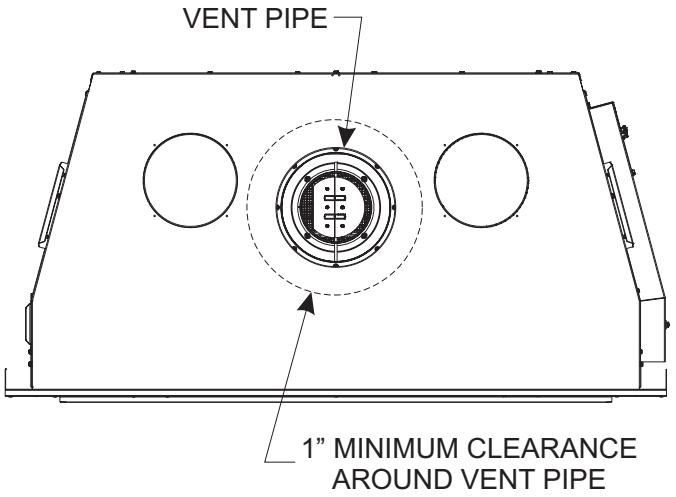

Figure 35

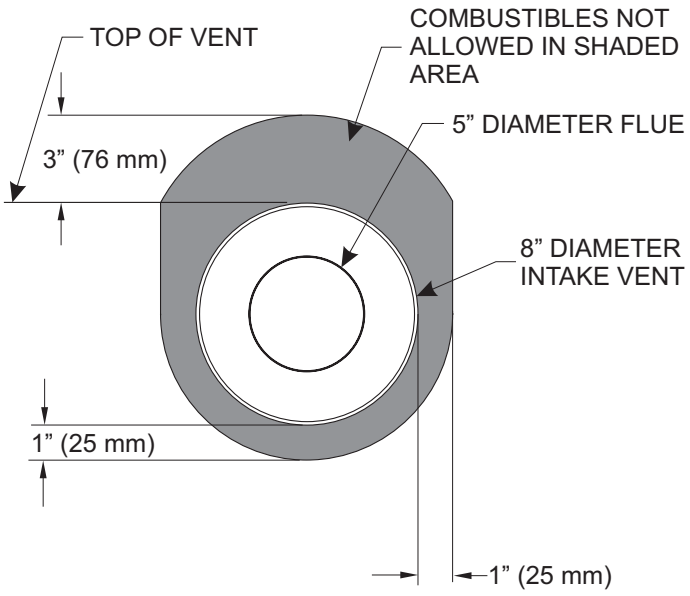

Horizontal Vent Clearances - Figure 36

ATTENTION: Cold climate installation recommendation: When installing this unit against an exterior wall, the exterior wall must be insulated to conform to applicable insulation codes. The fireplace outer wrapper is not considered a thermal barrier and can allow air infiltration. Care should be taken to properly seal the chase area so air infiltration is kept to a minimum and drafts do not occur through the fireplace.

Vent Runs
In planning the installation, you must install certain components before the fireplace is secured in position. These include the direct-vent system, gas piping, and the electrical wiring.

The appliance can be mounted on any of the following surfaces:
1. A flat, hard combustible or non-combustible surface.
2. A raised wooden platform.
3. Four corner supports(such as masonry blocks). These supports must be positioned so they contact all four perimeter edges on the bottom of the unit.

INSTALLATION (CONT'D)

VERTICAL, 90-DEGREE ELBOW TO HORIZONTAL OUT THE WALL
(12 inch minimum rise before elbow)

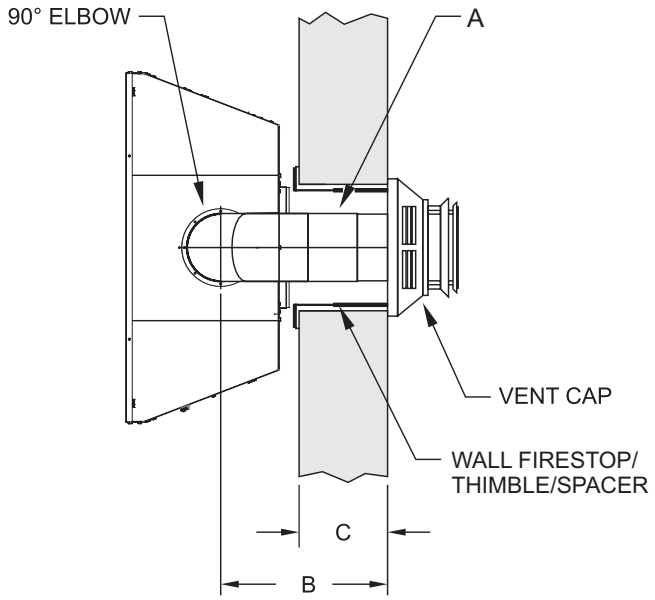

DIMENSION		
A	**B**	**C**
6"	12 1/2	4 3/4
9"	15 1/2	4 3/4
12"	18 1/2	4 3/4

Figure 37

CORNER INSTALLATION - VERTICAL, 90-DEGREE ELBOW TO HORIZONTAL OUT THE WALL
(12 inch minimum rise before elbow)

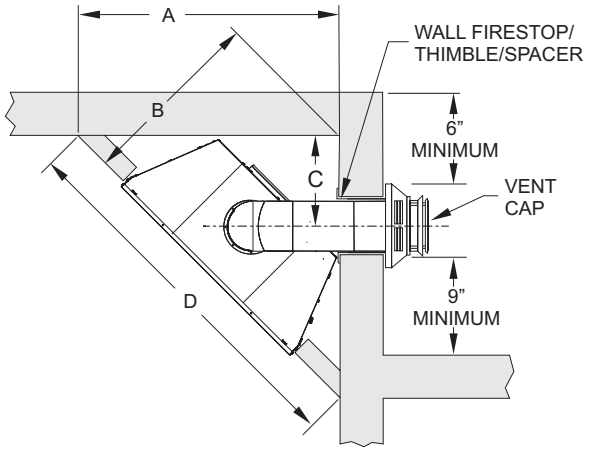

DIMENSION	DVCT36	DVCT40
A	54 1/16	59 11/16
B	38 11/16	42 1/4
C	19 1/4	20 5/16
D	77 7/8	84 3/8

Figure 38

VERTICAL, 90-DEGREE ELBOW WITH HORIZONTAL TERMINATION

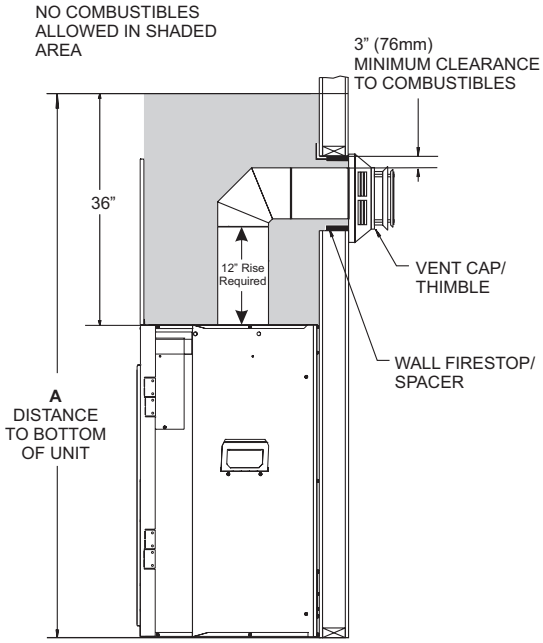

Figure 39

DIMENSION	DVCT36	DVCT40
A	76	78

Note For DVCT36 Horizontal Vent Runs Only:
The wall thimble spacer and wall thimble should be used for horizontal vent installations through combustible wall. The wall thimble spacer should be sandwiched between the wall and the inside half of the wall thimble refer. **See Figure 42.** The spacer flanges are to point towards the wall.

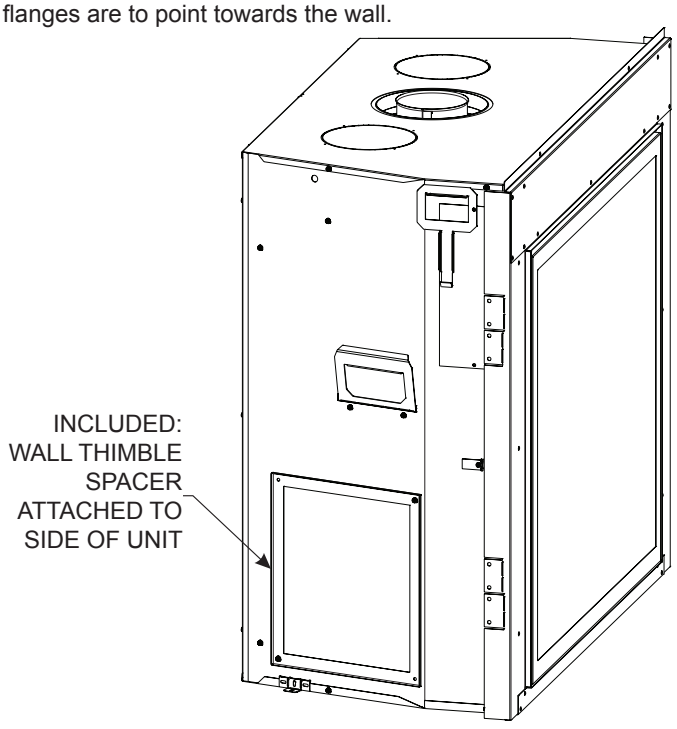

Figure 40

VENT FRAMING

Installing Support Brackets
Install a horizontal pipe support used for each 3 feet of horizontal run to framing members. Allow 3 inches of clearance to combustibles above 5x8 inch diameter pipe and elbows and 1 inch of clearance on both sides and bottom.

Support vertical runs of this vent systems every 4 feet using wall brackets attached to the vent pipe and secured with nails or screws to structural framing.

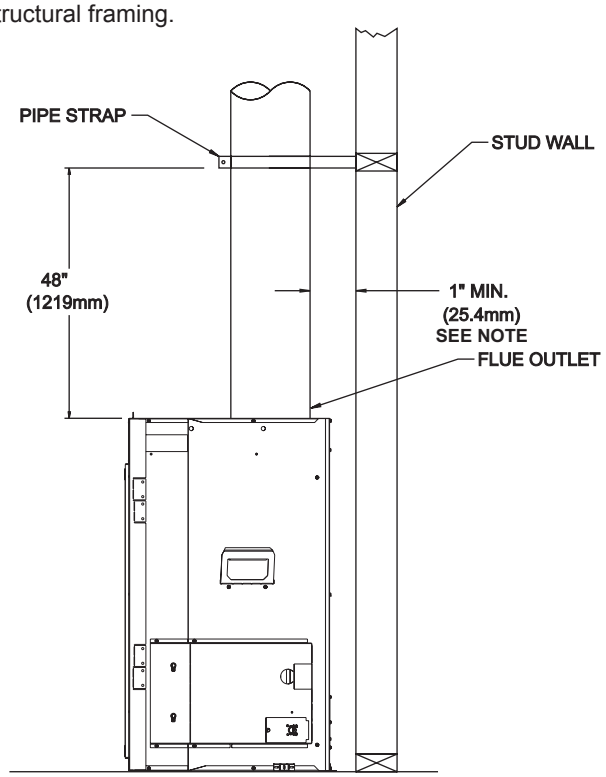

Installing Firestops - Figure 41

Firestops are required for safety whenever the vent system passes through an interior wall, an exterior wall, or a ceiling. These firestops act as a firebreak heat shield and as a means to insure that minimum clearances are maintained to the vent system.

Horizontal Firestops
Horizontal runs in the vent system which pass through either interior or exterior walls, require the use of wall firestops on both sides of the wall through which the vent passes.
Position the firestops on both sides of the framed hole, previously cut. Secure firestop with nails or screws. The heat shields of the firestops MUST BE placed towards the top of the hole. Continue the vent run through the firestops.

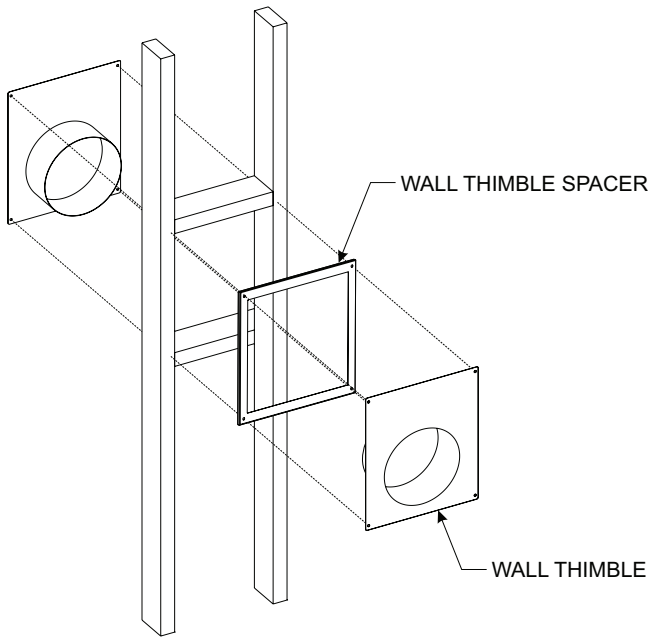

Figure 42

NOTICE: Use the wall thimble (SD58DVAWTEC) to maintain the required three inches of clearance to combustibles above the vent.

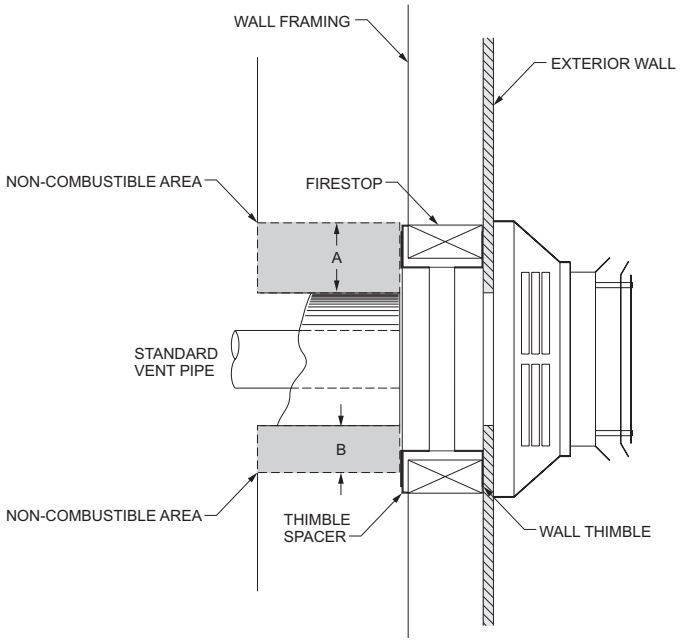

DIMENSIONS (In Inches)	
A	3
B	1

Figure 43

VENT FRAMING (CONT'D)

Vertical Firestops

Vertical runs which pass through ceilings require 1 ceiling firestop at the hole in each ceiling through which the vent passes.

Position a plumb bob directly over the center of the vertical vent component and mark the ceiling to establish the center point of the vent. Drill a hole through this center point and check the floor above for any obstructions such as wiring or plumbing runs. Reposition the appliance and vent system, if necessary, to accommodate ceiling joists and/or obstructions.

Cut a 10-5/8 inch x 10-5/8 inch hole through the ceiling using the center point previously marked. Frame the hole with framing lumber the same size as the ceiling joists. **See Figure 44.** If the area above the ceiling is NOT an attic, position and secure the ceiling firestop on the ceiling side of the previously cut and framed hole. **See Figure 45.** If the area above the ceiling is an attic, position and secure the firestop on top of the previously framed hole. **See Figure 46.**

NOTICE: Remove insulation from the framed area in the attic before installing the firestop and vent pipes.

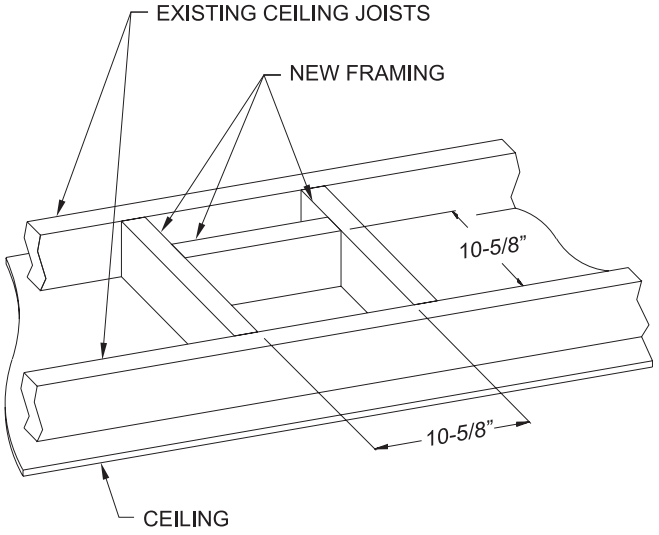

Figure 44

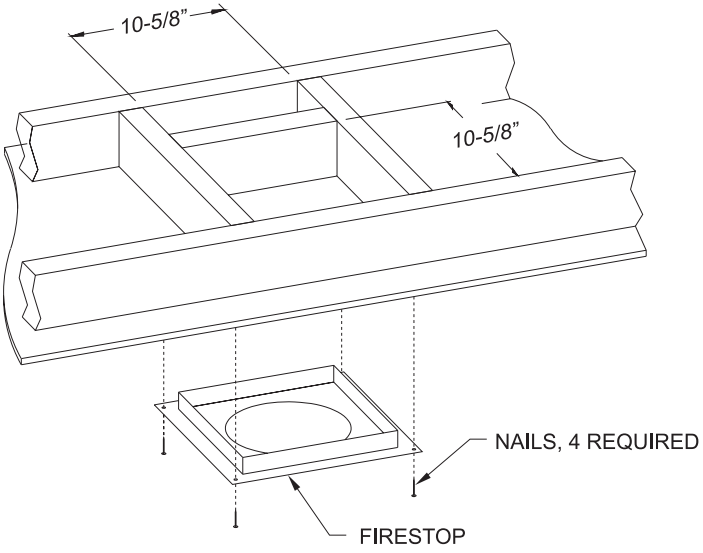

Figure 45

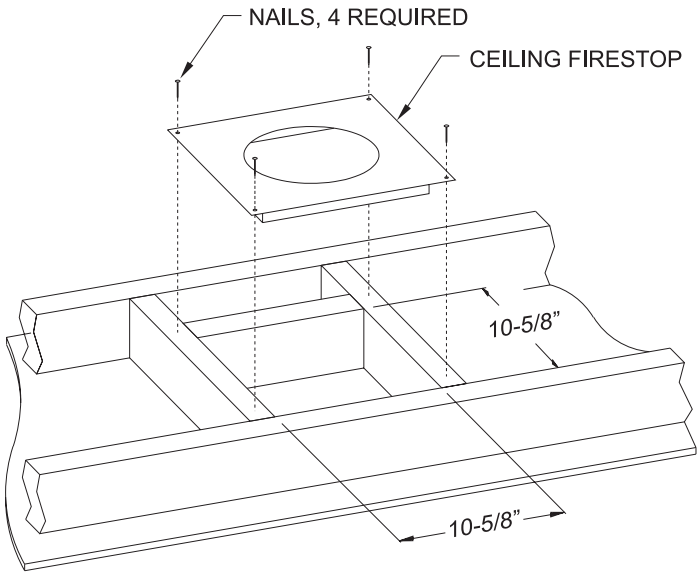

Figure 46

Finishing

Finish the walls with the material of your choice. **Figure 14 and 16** on page 12 shows the minimum vertical and corresponding maximum horizontal dimensions of mantels or other combustible projections above the top front edge of the fireplace.

Only non-combustible materials may be used to cover the black fireplace front.

VENT SYSTEM IDENTIFICATION

Begin the vent system installation by selecting the type of venting to be installed and the path that it will take. Verify that clearances are met throughout the path of the venting system.

NOTICE: These fireplaces cannot be vented out the rear.

Determine how the vent system will be terminated out the side of the house or through the roof. Verify clearances for the termination.

When selecting a vent system for use with the fireplace, refer to the "Special Vent Systems" section below to determine what systems are acceptable. Check all clearances and venting components. Identify if any problems existing in the vent system.

NOTICE: All outer connection joints must be sealed with aluminum tape, screws or silicone sealant rated above 300°F/149°C. The inner flue joints do not require any sealant.

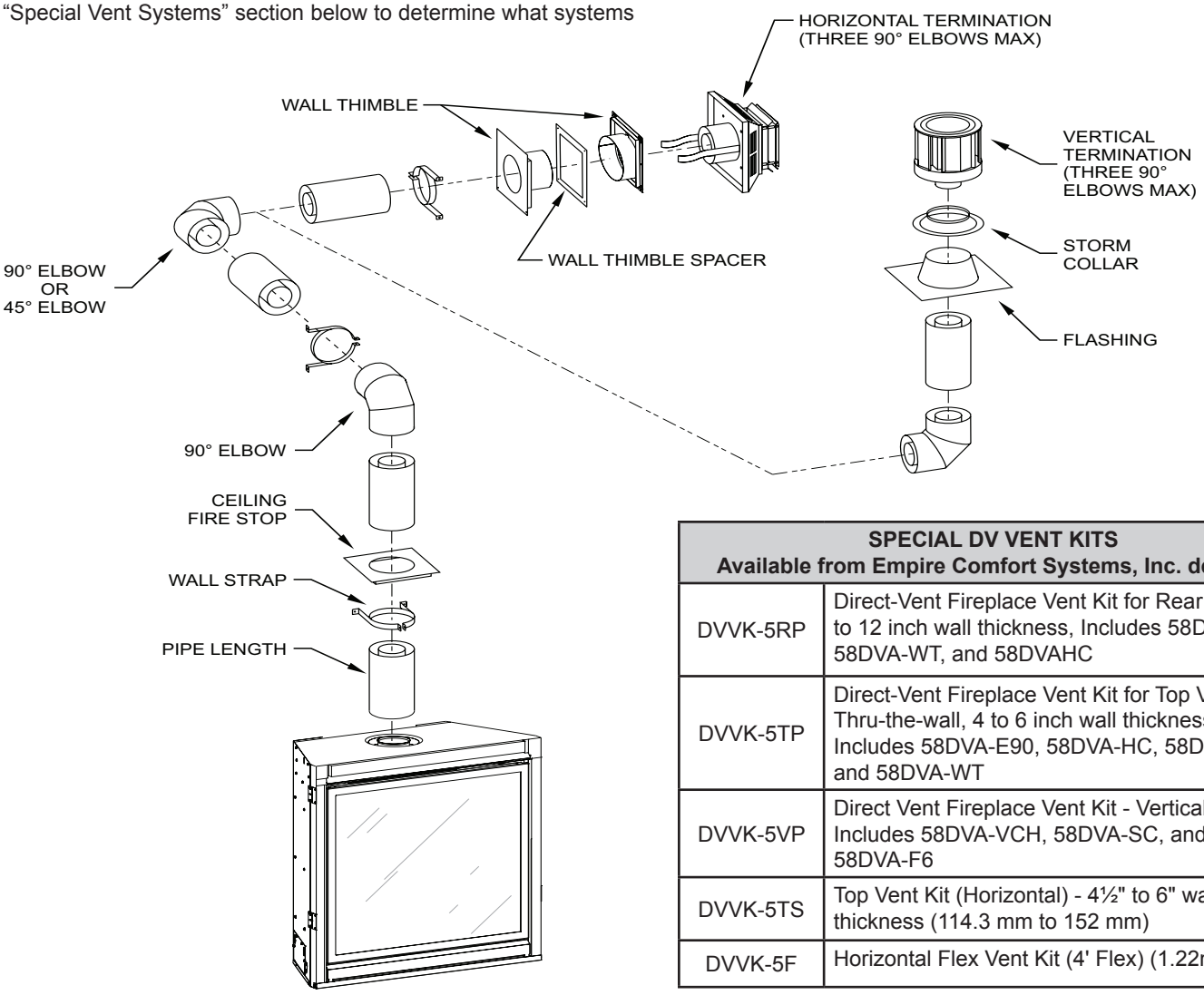

Figure 47

GENERIC MODEL SHOWN

SPECIAL DV VENT KITS Available from Empire Comfort Systems, Inc. dealers.	
DVVK-5RP	Direct-Vent Fireplace Vent Kit for Rear Vent, 6 to 12 inch wall thickness, Includes 58DVA-06, 58DVA-WT, and 58DVAHC
DVVK-5TP	Direct-Vent Fireplace Vent Kit for Top Vent, Thru-the-wall, 4 to 6 inch wall thickness, Includes 58DVA-E90, 58DVA-HC, 58DVA-06, and 58DVA-WT
DVVK-5VP	Direct Vent Fireplace Vent Kit - Vertical, Includes 58DVA-VCH, 58DVA-SC, and 58DVA-F6
DVVK-5TS	Top Vent Kit (Horizontal) - 4½" to 6" wall thickness (114.3 mm to 152 mm)
DVVK-5F	Horizontal Flex Vent Kit (4' Flex) (1.22m)

SPECIAL VENT SYSTEMS

The following vent systems are acceptable for use with the DVCT36 and DVCT40 series fireplaces:

- Simpson Duravent® GS 5 inch x 8 inch
- American Metal Products 5 inch x 8 inch
- Selkirk Direct-Temp® 5 inch x 8 inch
- Security Secure Vent® 5 inch x 8 inch
- Excel DV Venting 5 inch x 8 inch
- Empire Flexvent Kit DVVK-5F
  - 6 inch piece of hard pipe is required (See flex vent instruction section)
- BDM - 5 inch x 8 inch
- Metal Fab Sure Seal® 5 inch x 8 inch
  - Adapter is required to use this vent Contact Metal Fab

VENTING FIREPLACE

Example of possible venting systems using two 90° elbows: V is listed as minimum vertical dimensions and H1 + H2 is listed as total of maximum horizontal dimensions. The maximum vertical and horizontal distances for two 90° elbows as shown in **Figure 47** is 20 feet (6.1 m).

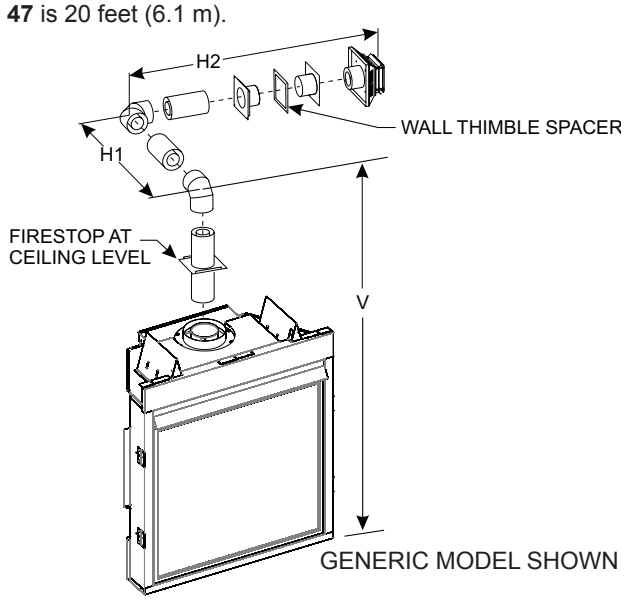

SEE GRAPH FOR PERMISSIBLE "H" AND "V" DIMENSIONS
NOTE: H1 AND H2 MUST BE ADDED TOGETHER TO USE CHART

Figure 48

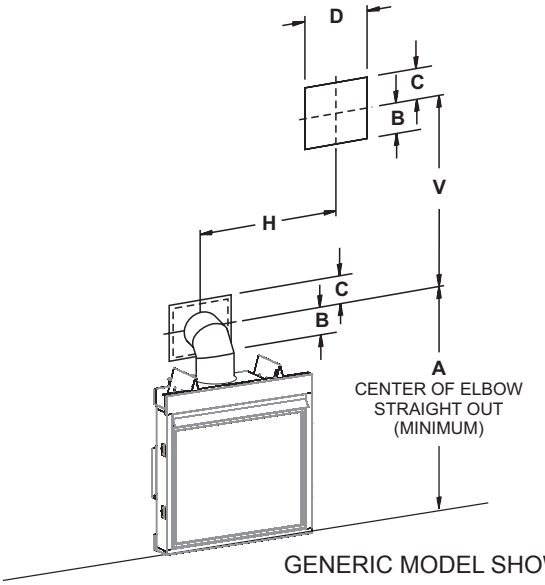

MODELS	HARD ELBOW DIMENSIONS (In Inches)			
	A	B	C	D
DVCT36	57	5-5/16	7-5/16	10-5/8
DVCT40	59	5-5/16	7-5/16	10-5/8

Minimum hole location dimensions for through the wall horizontal installations with 90 degree elbow and 12 inch rise off top of fireplace.

(See Figure 55 on page 27) for permissible "H" and "V" dimensions.

Figure 49

Damper Adjustment

This unit has an adjustable damper for use with vertically terminated units only. The damper is shipped in a fully open position and may be adjusted per installation. To adjust, loosen the Phillip screw and rotate handle towards the left to close. We recommend a 1/3 closed on installations above 30 ft. **See Figures 50 to 52.**

⚠ WARNING

Adjust damper for vertically terminated units only. Do not adjust for horizontally terminated units

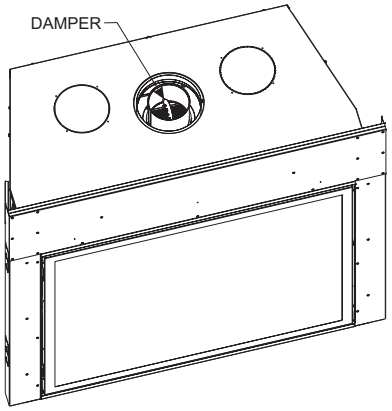

Figure 50

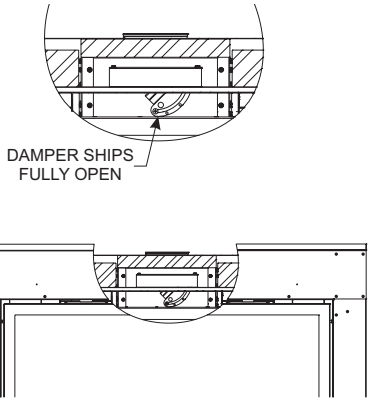

Figure 51

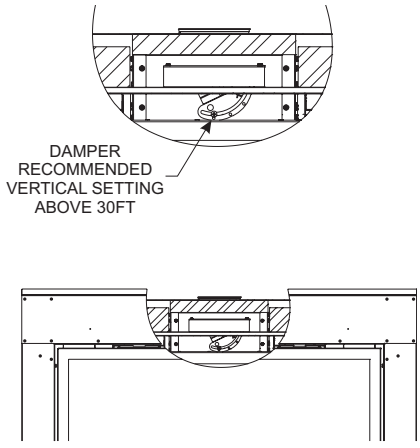

Figure 52

VENTING FIREPLACE (CONT'D)

Positioning the Fireplace
Determine the exact position of the appliance so the direct-vent termination will be centered (if possible) between two studs. This will avoid any extra framing. All vent kit pipes should be assembled on the unit after the unit is moved into the final position.

Cutting the Hole
After the fireplace has been positioned in its permanent location, cut the hole through the exterior wall of the house. This hole must be 10 inches (254mm) high x 10-5/8 inches(270mm) wide with its center line determined by the amount of vertical rise and horizontal run of the termination. **See Figure 53.** When locating the hole the bottom of the cap must be 12 inches (305mm) above the ground level, and top of the cap must be no less than 18 inches (457mm) below a combustible projection, and no closer than 9 inches (229mm) to any wall running parallel to vent termination.

For installations requiring a vertical rise on the exterior of the building, 14-inch and 36-inch tall Snorkel Terminations are available. Follow the same installation procedures as used for standard Horizontal Terminations. If the Snorkel Termination must be installed below grade (i.e. basement applications, proper drainage must be provided to prevent water from entering the Snorkel Termination. **See Figure 54.** Do not attempt to enclose the Snorkel within the wall or any other type of enclosure.

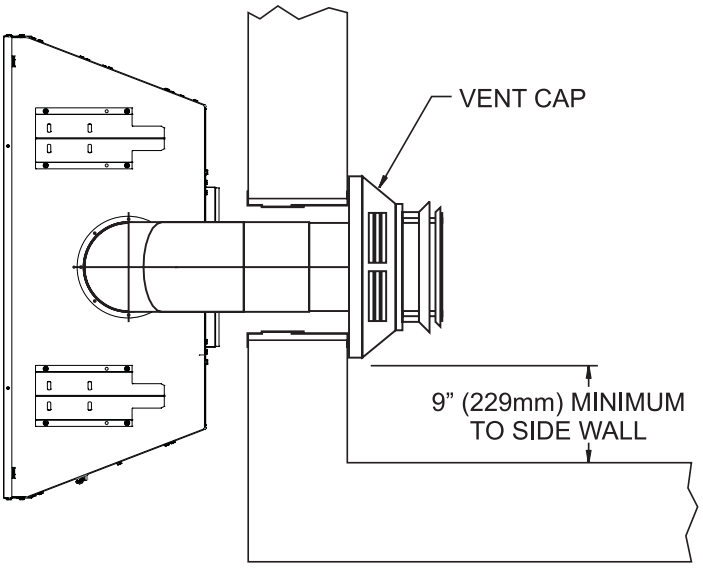

GENERIC MODEL SHOWN
Figure 53

Below - Grade Installation
When it is not possible to meet the required vent termination clearances of 12 inch (305 mm) above grade level, a snorkel kit is recommended. It allows installation depth down to 7 inch (178 mm) below grade level. The 7 inch (178 mm) is measured from the center of the horizontal vent pipe as it penetrates through the wall.

Ensure the sidewall venting clearances are observed. If the venting system is installed below ground, protect the vent with a window well that has proper drainage.

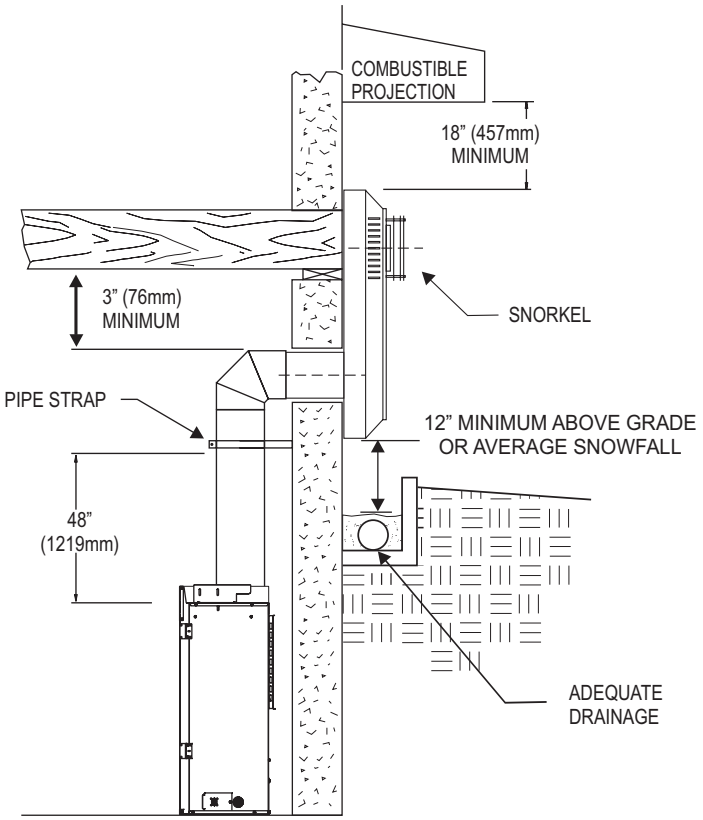

TYPICAL BASEMENT INSTALLATION
GENERIC MODEL SHOWN
Figure 54

VENTING FIREPLACE (CONT'D)

This fireplace vents out of the top only, but allows for a horizontal or a vertical vent termination. This fireplace requires a minimum 12-inch vertical vent pipe before any horizontal venting.

Use the Vent Graph Below for Horizontal and Vertical Termination

1. First, determine the desired position of the fireplace and the desired location of the vent termination.
2. Measure from the door to the centerline of the horizontal vent pipe at the desired termination height.
3. Measure the distance from the wall to the centerline of the vertical vent pipe.
4. Plot this intersect point on the graph. This point must fall in the white area of the grid to ensure proper venting. If not, reposition the fireplace and/or venting.

SIDEWALL VENT GRAPH (Dimensions in Feet)

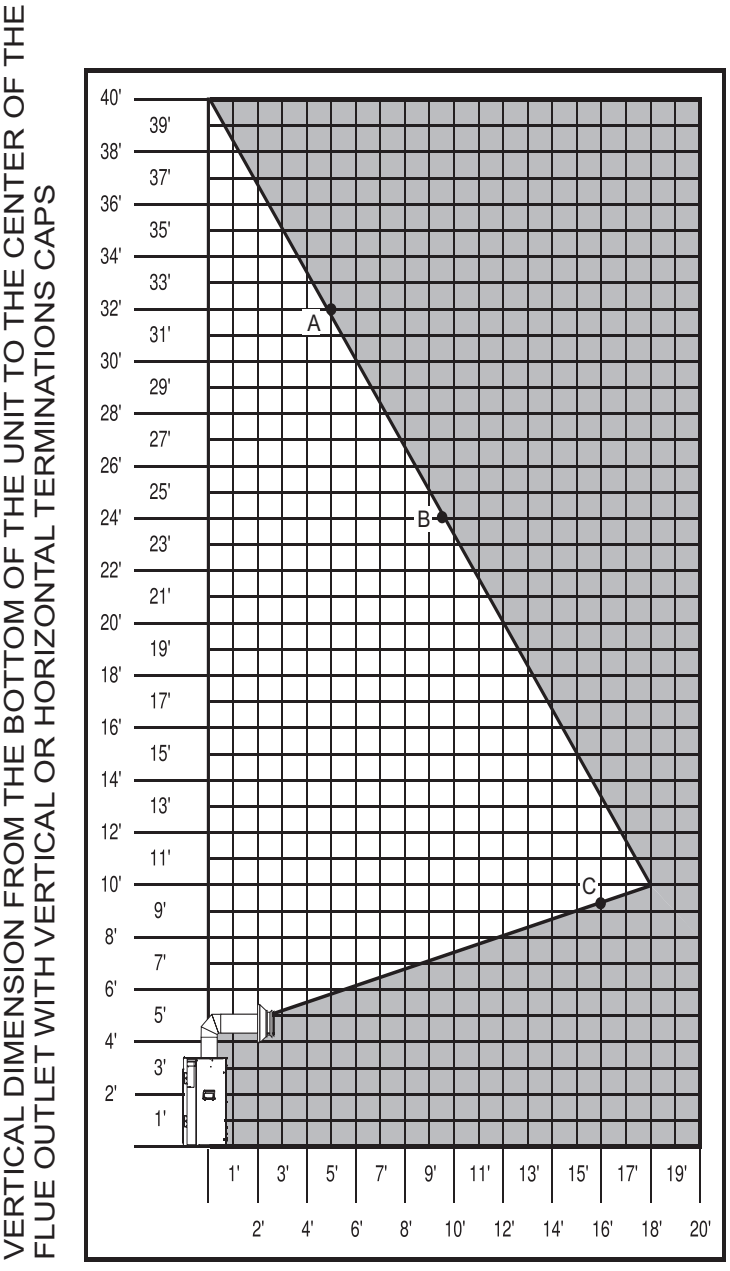

Figure 55

EXAMPLE A: Long Vertical
The vertical dimension from the floor to the center line of the horizontal venting is 32 feet, so the horizontal run to the outer wall flange must not exceed 5 feet.

EXAMPLE B: Medium Vertical
The vertical dimension from the floor to the centerline of the horizontal venting is 24 feet, so the horizontal run to the outer wall flange must not exceed 91/2 feet.

EXAMPLE C: Long Horizontal
If the horizontal run to the outer wall flange is 16 feet, the vertical dimension from the floor of the unit to the center of the termination must not be less than 9 1/2 feet.

EXAMPLE D: Minimum Vertical and Maximum Horizontal
The vertical vent off the top of the fireplace is 1 foot, so horizontal run to the outer wall flange is limited to 2 feet.

SPECIAL NOTE: For each 45° elbow installed in the horizontal run, reduce the maximum length of the horizontal run by 18 inches. Reduce by 36 inches for every 90° elbow. This does not apply if the elbows are installed on the vertical part of the vent system.

Example: According to the chart the maximum horizontal vent length is 18 feet. If two 45° elbows are required in the horizontal vent it must be reduced to 15 feet.

The maximum number of 45° elbows permitted is two - weather installed in the vertical or horizontal run.

The maximum number of 90° elbows in a vent run is three.

NOTE: On vertical venting the first elbow does not get counted.

NOTE: A horizontal vent with the minimum required vertical rise (using a 12-inch section of vent before the elbow) will use a maximum 2 foot section of horizontal vent before the termination.

☐ Acceptable vertical and horizontal vent run.
(40' maximum vertical and 18' maximum horizontal)

■ Unacceptable vertical and horizontal vent run.
See text above for Examples A, B and C.

HORIZONTAL TERMINATION

One 90° Elbow

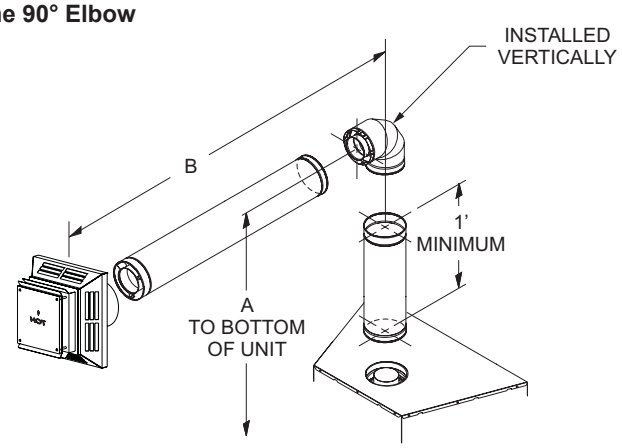

EXAMPLE VENT RUNS		
INITIAL PIPE LENGTH *(In Inches)*	**A-Vertical** *(In Feet)*	**B-Horizontal** *(In Feet)*
12	5	2
24	6	6
36	7	9
48	8	12

Figure 56

NOTE: Pipe straps must be used every 2 feet to secure venting.

Two 45° Elbows

Installation requirements to replace the first 90° elbow with two 45° elbows:

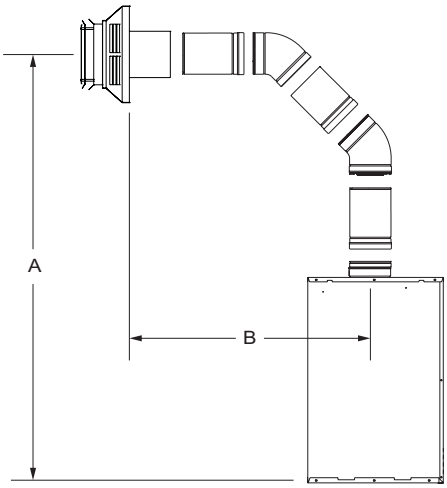

EXAMPLE VENT RUNS		
INITIAL PIPE LENGTH *(In Inches)*	**A-Vertical** *(In Feet)*	**B-Horizontal** *(In Feet)*
12	6	6
24	7	9
36	8	12
48	9	15

Figure 57
GENERIC MODEL SHOWN

Two 90° Elbows

NOTE: Subtract 3 feet from the total horizontal measurement for each 90° elbow installed horizontally. Subtract 1-1/2 feet from the total horizontal measurement for each 45° elbow installed horizontally.

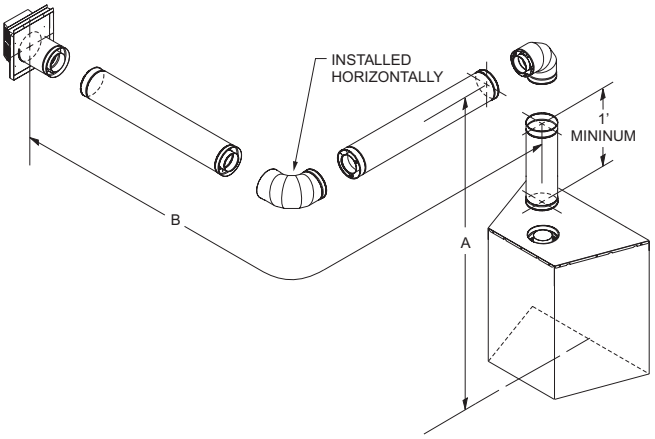

EXAMPLE VENT RUNS		
INITIAL PIPE LENGTH *(In Inches)*	**A-Vertical** *(In Feet)*	**B-Horizontal** *(In Feet)*
12	5	Not Allowed
24	6	3
36	7	6
48	8	9

Figure 58

Three 90° Elbows

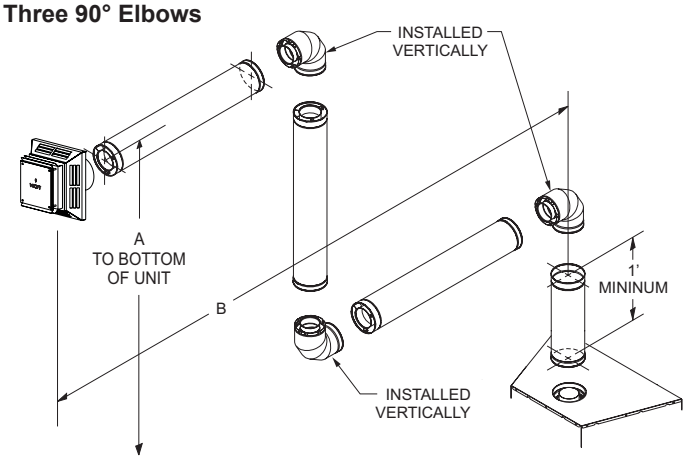

EXAMPLE VENT RUNS		
INITIAL PIPE LENGTH *(In Inches)*	**A-Vertical** *(In Feet)*	**B-Horizontal** *(In Feet)*
12	5	Not Allowed
24	6	6
36	7	9
48	8	12

Figure 59
GENERIC MODEL SHOWN

VERTICAL TERMINATION

No Elbows

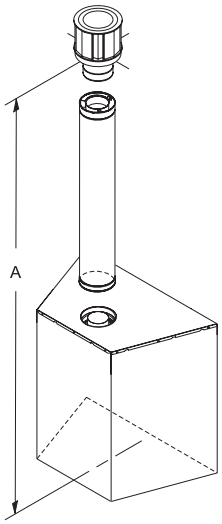

DIMENSIONS (In Feet)	
MINIMUM	**MAXIMUM**
10	40

Figure 60
GENERIC MODEL SHOWN

Two 90° Elbows

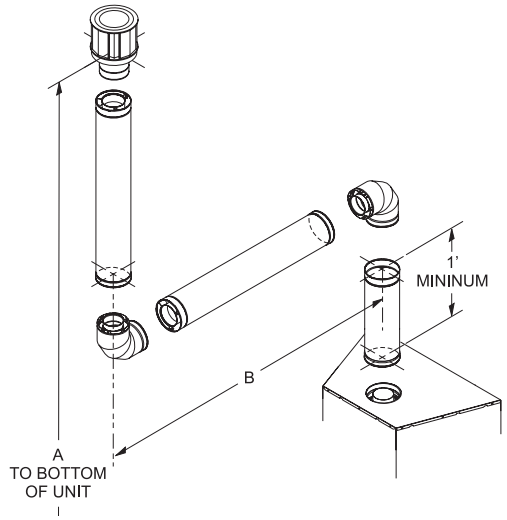

EXAMPLE VENT RUNS		
INITIAL PIPE LENGTH *(In Inches)*	**A-Vertical** *(In Feet)*	**B-Horizontal** *(In Feet)*
12	34	3
24	30	6
36	25	9
48	20	12

*Maximum horizontal run is 100% of vertical, but cannot exceed 18 ft.

Figure 61
GENERIC MODEL SHOWN

Three 90° Elbows

NOTE: Subtract 3 feet from the total horizontal measurement for each 90° elbow installed horizontally. Subtract 1-1/2 feet from the total horizontal measurement for each 45° elbow installed horizontally.

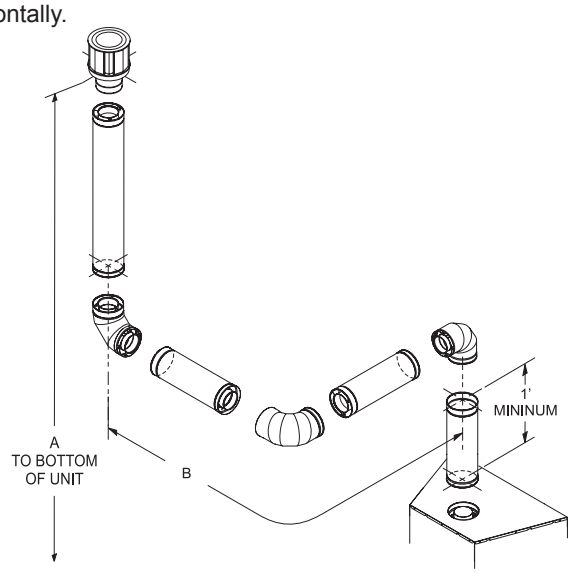

EXAMPLE VENT RUNS		
INITIAL PIPE LENGTH *(In Inches)*	**A-Vertical** *(In Feet)*	**B-Horizontal** *(In Feet)*
12	31	3
24	27	6
36	22	9
48	17	12

*Maximum horizontal run is 100% of vertical, but cannot exceed 18 ft.

Figure 62
GENERIC MODEL SHOWN

VERTICAL TERMINATION (CONT'D)

Locate and mark the center point of the vent pipe using a nail on the underside of the roof. Drive the nail through the center point. Mark the outline of the roof hole around this center point.

NOTE: Size of the roof hole dimensions depend on the pitch of the roof. There must be a 1 inch (25 mm) clearance to the vertical pipe sections. This clearance is to all combustible material.

Cover the opening of the vent pipe and cut and frame the roof hole. Use framing lumber the same size as the roof rafters and install the frame securely. Flashing anchored to frame must withstand high winds. The storm collar is placed over this joint to make a water-tight seal. Non-hardening sealant should be used to completely seal this flashing installation.

Determining Minimum Vent Height Above the Roof.

⚠ WARNING

Major U.S. building codes specify minimum chimney and/or vent height above the roof top. These minimum heights are necessary for safety. These specifications are summarized in Figure 63.

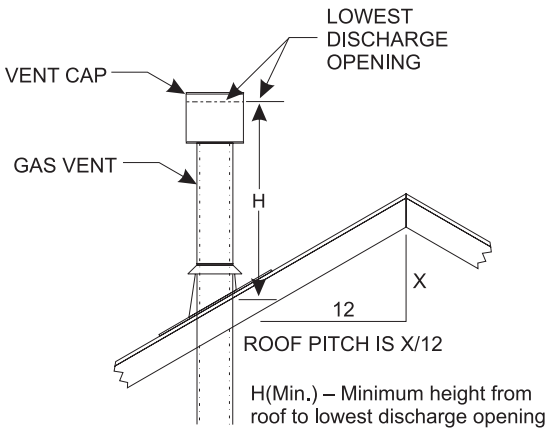

ROOF PITCH	H (Min.)
Flat to 6/12	12" (305 mm)
6/12 to 7/12	15" (381 mm)
Over 7/12 to 8/12	18" (457 mm)
Over 8/12 to 16/12	24" (610 mm)
Over 16/12 to 21/12	36" (914 mm)

Figure 63

For steep roof pitches, increase the vent height. High -wind conditions, nearby trees, adjoining roof lines, steep pitched roofs, and other factors can result in poor draft, or down-drafting. In these cases, increasing the vent height may solve this problem.

General Maintenance

Inspect venting system semi-annually as follows:

1. Check for corrosion areas of the venting system exposed to the elements. These will appear as rust spots or streaks and, in extreme cases, holes. Replace damaged components should immediately.
2. Remove the cap and shine a flashlight down the vent. Remove any bird nests or other foreign material.
3. Check for evidence of excessive condensate, such as water droplets forming in the inner liner and subsequently dripping out at joints. Condensate can cause corrosion of caps, pipe and fittings. It may be caused by having excessive lateral runs, too many elbows and exterior portions of the system being exposed to cold weather.
4. Inspect joints to verify that no pipe sections or fittings have been disturbed or loosened. Also, check mechanical supports, such as wall straps or plumbers' tape for rigidity.

Venting termination shall not be recessed into a wall or siding.

A removable panel or other means must be provided in the enclosure for visual inspection of the flue connection.

NOTE: This also pertains to vertical vent systems installed on the outside of the building.

Slide the vertical vent cap over the end of the vent pipe and secure. **See Figure 64.**

Installing the Vent System in a Chase

A chase is a vertical box-like structure built to enclose the gas appliance and/or its vent system. Though not normally required, vertical vent runs on the outside of a building may be installed inside a chase.

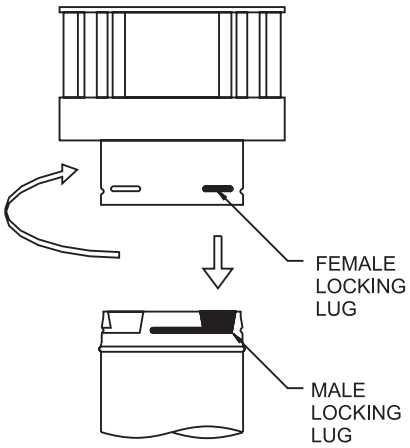

Figure 64

⚠ CAUTION

Treatment of firestop spacers and construction of the chase may vary with the type of building. These instructions are not substitutes for the requirements of local building codes. Check local building codes to determine the requirements for these steps.

NOTE: Build the chase large enough to the minimum clearance of combustible materials (including insulation) to the vent system. When installing the vent system in a chase, insulate the chase as you would the outside walls of your home. This is especially important in cold climates. Upon completion of chase framing, install the vent system by following the instructions in this manual.

VERTICAL TERMINATION (CONT'D)

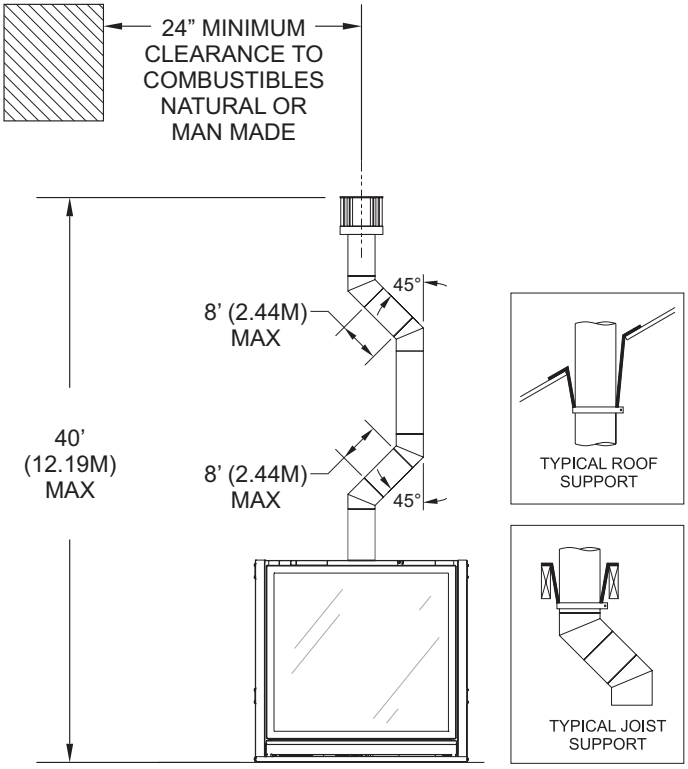

Figure 65

GENERIC MODEL SHOWN

The vertical termination cap for this fireplace must not be any closer than 24-in. to any other vent termination or chimney of any type. **See Figure 66.**

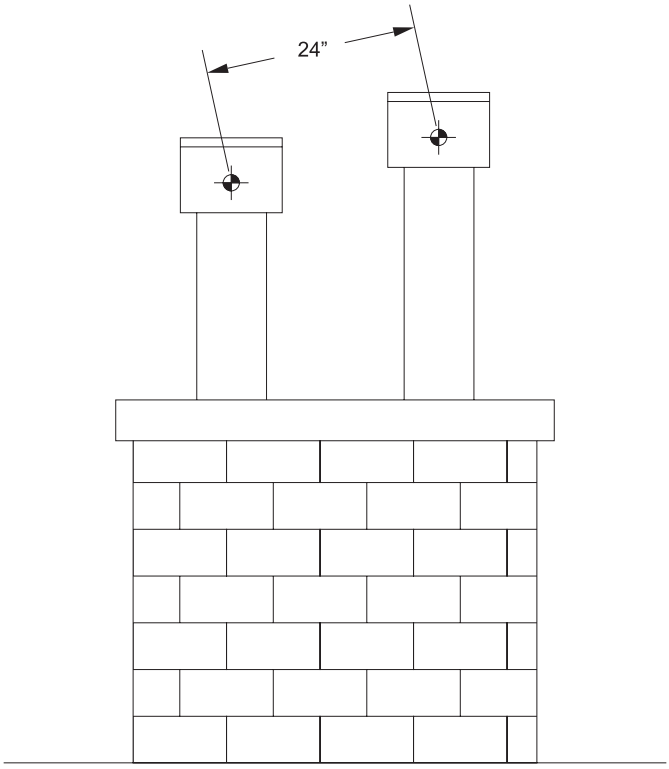

Figure 66

Vertical Through the Roof Applications

Your Gas Fireplace has been approved for:

a) Vertical installations up to 40 feet in height.
b) Two sets of 45 degree elbow offsets within these vertical installations. From 0 to a maximum of 8 ft. a vent pipe can be used between elbows.
c) Wall straps must be used to support offset pipe every 4'.

This application will require that you first determine the roof pitch and use the appropriate venting components.

OFFSET CHART

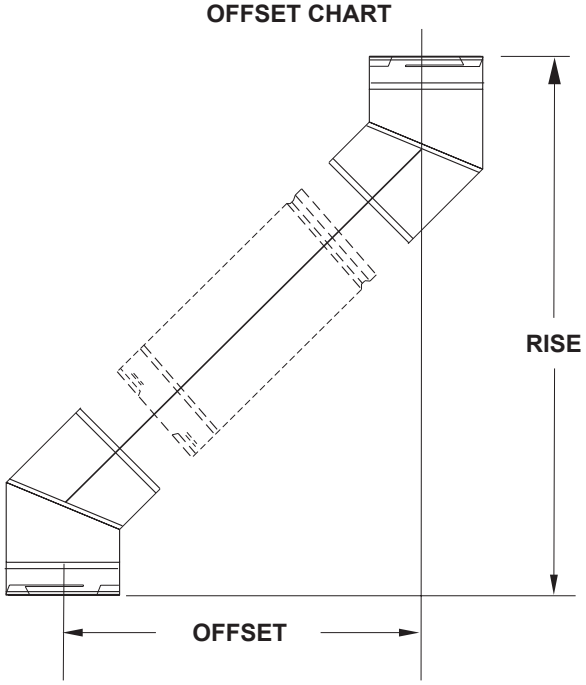

SIZE		5" X 8"	
ELBOW DEGREES	CHIMNEY SECTION	OFFSET INCHES	RISE INCHES
45°	0"	5-5/8"	15-3/8"
45°	6"	8-7/8"	18-3/8"
45°	9"	10-7/8"	20-5/8"
45°	12"	13"	22-5/8"
45°	24"	21-3/8"	31-1/8"
45°	36"	29-7/8"	39-3/8"
45°	36"	28-7/8"	39-3/8"
45°	48"	38-1/4"	47-7/8"

Figure 67

DVVK-5F FLEX VENT INSTRUCTIONS

The **DVVK-5F FLEX VENT KIT** includes the following components:

- (1) Horizontal Termination Cap
- (1) 4-foot section of Flex vent with spacers (5” flue/8” outer pipe) with flue adapter collar
- (1) Wall Firestop/Thimble Assembly
- Hardware pack that includes band clamps and screws

Maintain at least ½-inch rise for every 12 inches of vent run.

⚠ CAUTION

- **Because of sharp edges, always use gloves when handling the flex vent components.**
- **Always follow the general venting requirements for vent terminal location, vent lengths, and clearance to combustible materials.**
- **If space permits, it is generally easier to attach venting in the top vent configuration.**
- **Always stretch and secure venting with wire or metal strapping to ensure that the horizontal runs do not sag.**
- **Vent connections should overlap a minimum of 1” for proper sealing.**

INSTALLATION

1. Unpack vent components and check that all items are included.
2. Check to see that the vent spacer springs are located around the flue vent at 8” intervals along its length. **See Figures 68 & 69.** If not, stretch the spacer springs to about 15” long and wrap them around the flue, then interlock the ends of each spring. Maintain equal distance between spring spacers.

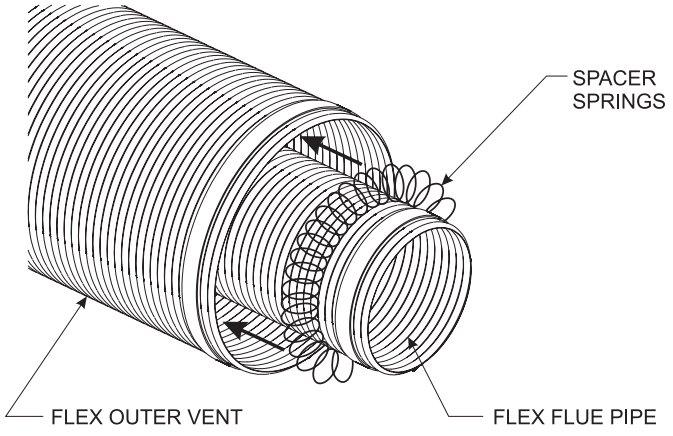

Figure 68

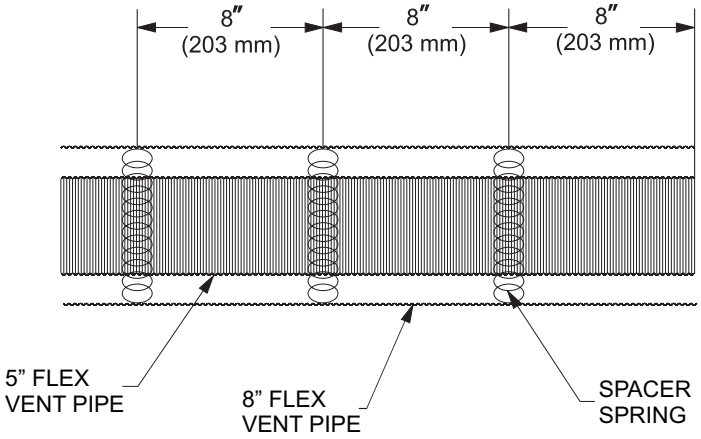

Figure 69

3. Attach a 6” piece of hard pipe to raise the connection point above the unit.
4. Use existing 8” diameter inlet collar to attach outer vent pipe.
5. Install the Wall Firestop/Thimble assembly as required through the wall. Refer to the venting charts in the fireplace manual to determine the proper height and size of the vent opening. The minimum opening should be 10” wide by 12” high. The minimum combustible clearance from the horizontal vent is 1” from sides and bottom, and 3” above the vent pipe. **See Figure 69.**
6. In most cases, after determining the length of the vent that is needed, it may be easier to install the flue and outer vent pipes to the Termination Cap first, then from the outside, feed the venting through the wall to the fireplace.
7. If the venting is to long, trim off any excess vent before attaching the vent end connectors.
8. Attach the Termination Cap to the outside of the house.

⚠ CAUTION

Do not use force when installing the Horizontal Vent Termination into the flex venting. Always stretch venting out first, then cut off excessive vent material prior to sliding the vent termination into the flue and inlet venting. Forcing the termination cap into the flex venting will deform the flue venting, which will restrict the exhaust gases, and cause improper operation of the fireplace.

DVVK-5F FLEX VENT INSTRUCTIONS (CONT'D)

9. Prior to making the vent connections, apply high temperature sealant (1000°F min.) to the vent connections before securing with the band clamps provided. Note: the flue pipe end without the adapter is to be installed to the Termination Cap.
10. Apply sealant to the outside of the flue pipe adapter and connect to the flex flue pipe. Then insert the adapter into the fireplace flue. Secure flue adapter to the fireplace flue with a minimum of two screws provided. **See Figure 70.**
11. Attach the Outer Vent pipe to the 8" diameter collar on the fireplace with a large band clamp provided. Sealant may also be used on the outer vent connections.
12. Check all vent connections for tightness. Make sure horizontal venting has the proper rise and combustible clearances required. Refer to venting charts in fireplace instruction manual.

NOTE: Do not add additional hard pipe. Do not mix hard pipe and flex after initial 6 inch.

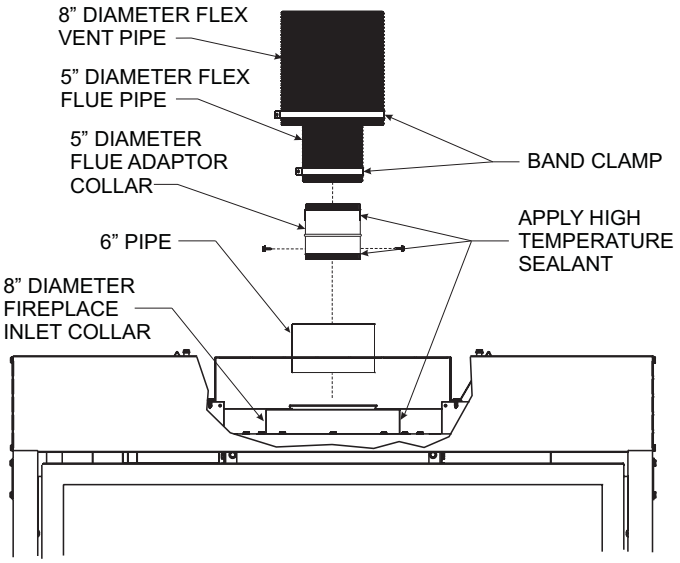

Figure 70

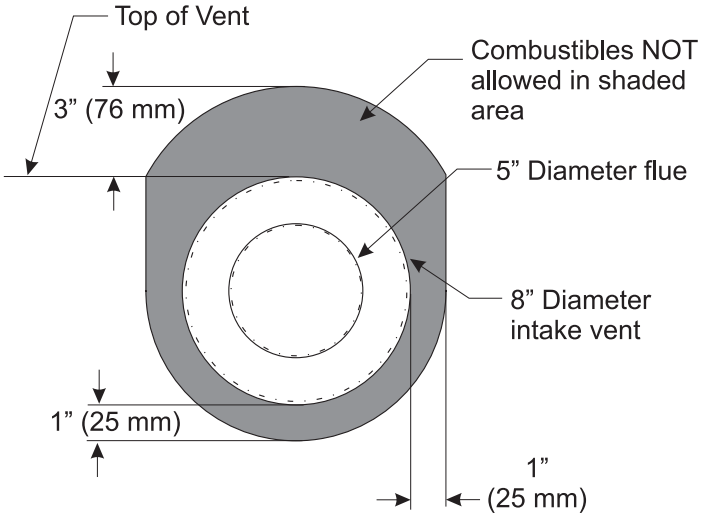

Figure 71

AIR SHUTTER ADJUSTMENT

This Unit Is Equipped With Adjustable Air Shutters (2).

The air shutters may be adjusted externally while unit is burning. The unit is sent out with the recommended setting, but may need to be fine tuned by installer.

NOTE: Fireplace must be turned off and cool to the touch before proceeding.

1. Remove barrier screen and glass door. See maintenance and service section of this manual. **See Figure 72.**

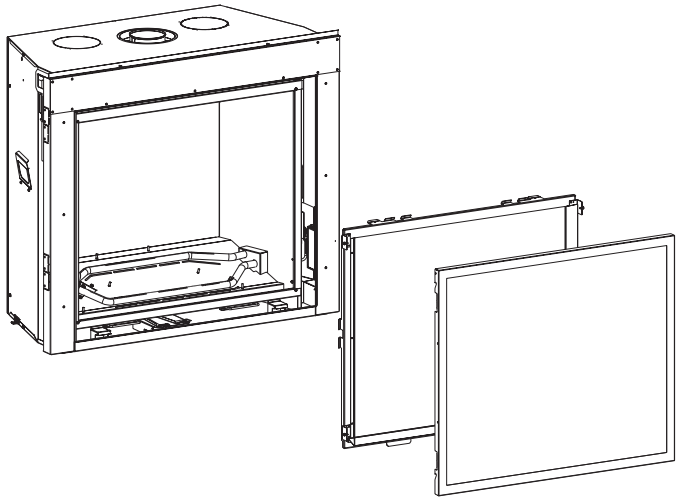

Figure 72

2. Loosen screws (2) that lock the air shutter handles. **See Figure 73.**

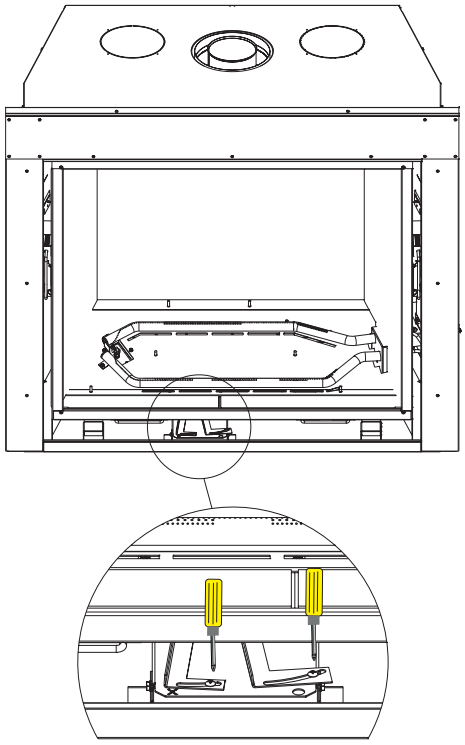

Loosen (2) air shutter handle screws

Figure 73

3. Replace glass door. See maintenance and service section of this manual.
4. Turn unit on, see operating instructions in home owner's instructions, allow unit to warm up from 15-30 minutes to obtain it's full flame appearance.
5. You may now adjust the air shutters. The right air shutter handle adjusts the front air shutter and the left air shutter handle adjusts the rear air shutter. Slide the air shutter handle towards the right to open and to the left to close. **See Figure 74.**

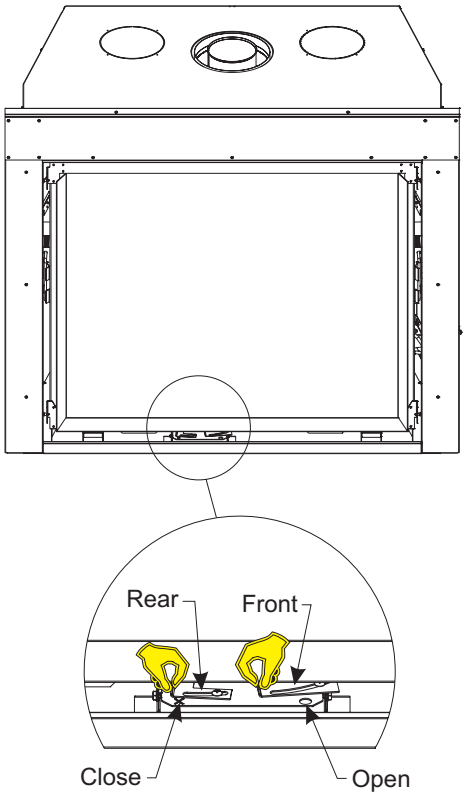

Figure 74

6. Turn off unit and allow to cool before replacing the barrier screen. See maintenance and service section of this manual.

This page is intentionally left blank.

CONTROL SYSTEM TROUBLESHOOTING

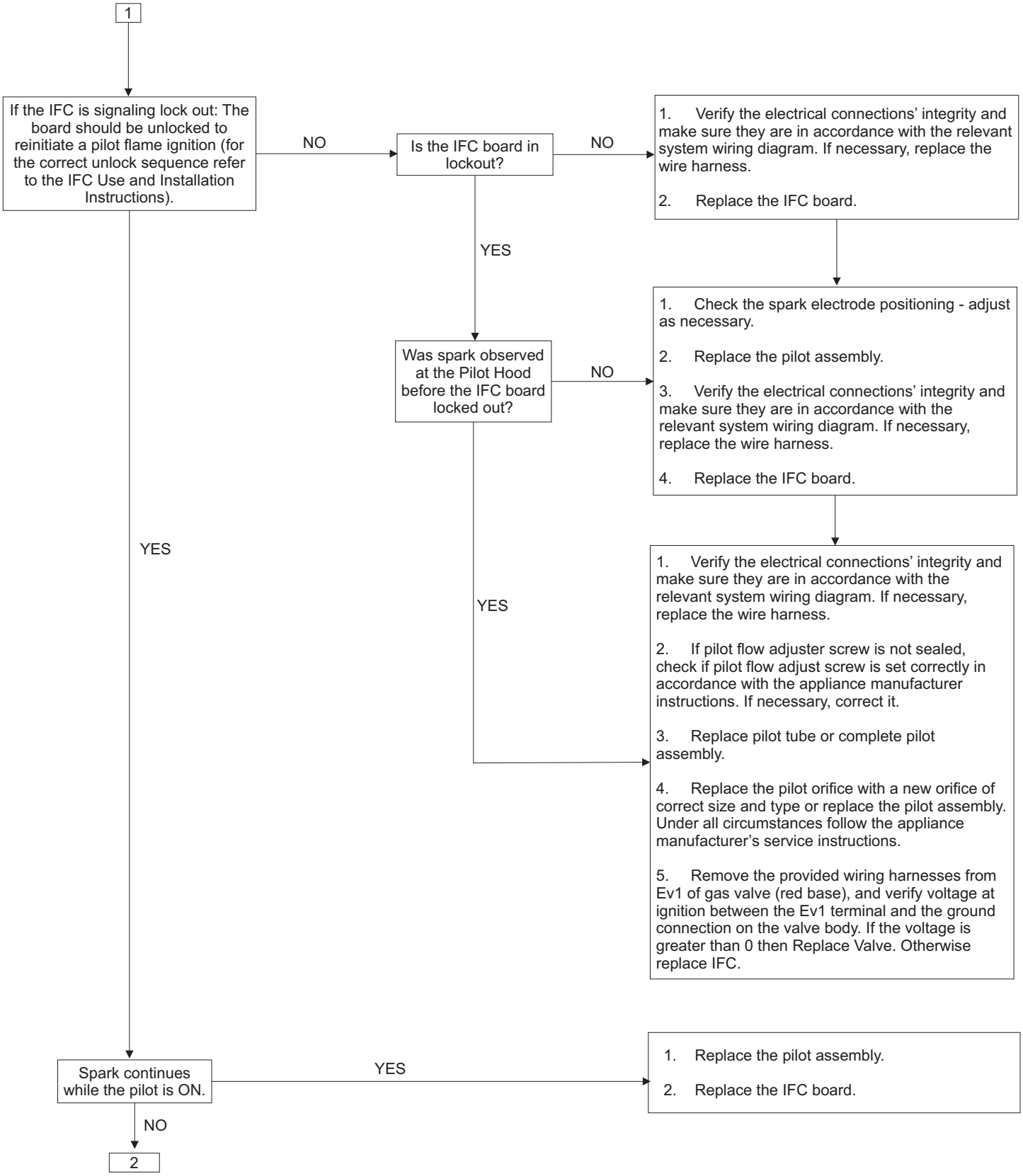

CONTROL SYSTEM TROUBLESHOOTING (CONT'D)

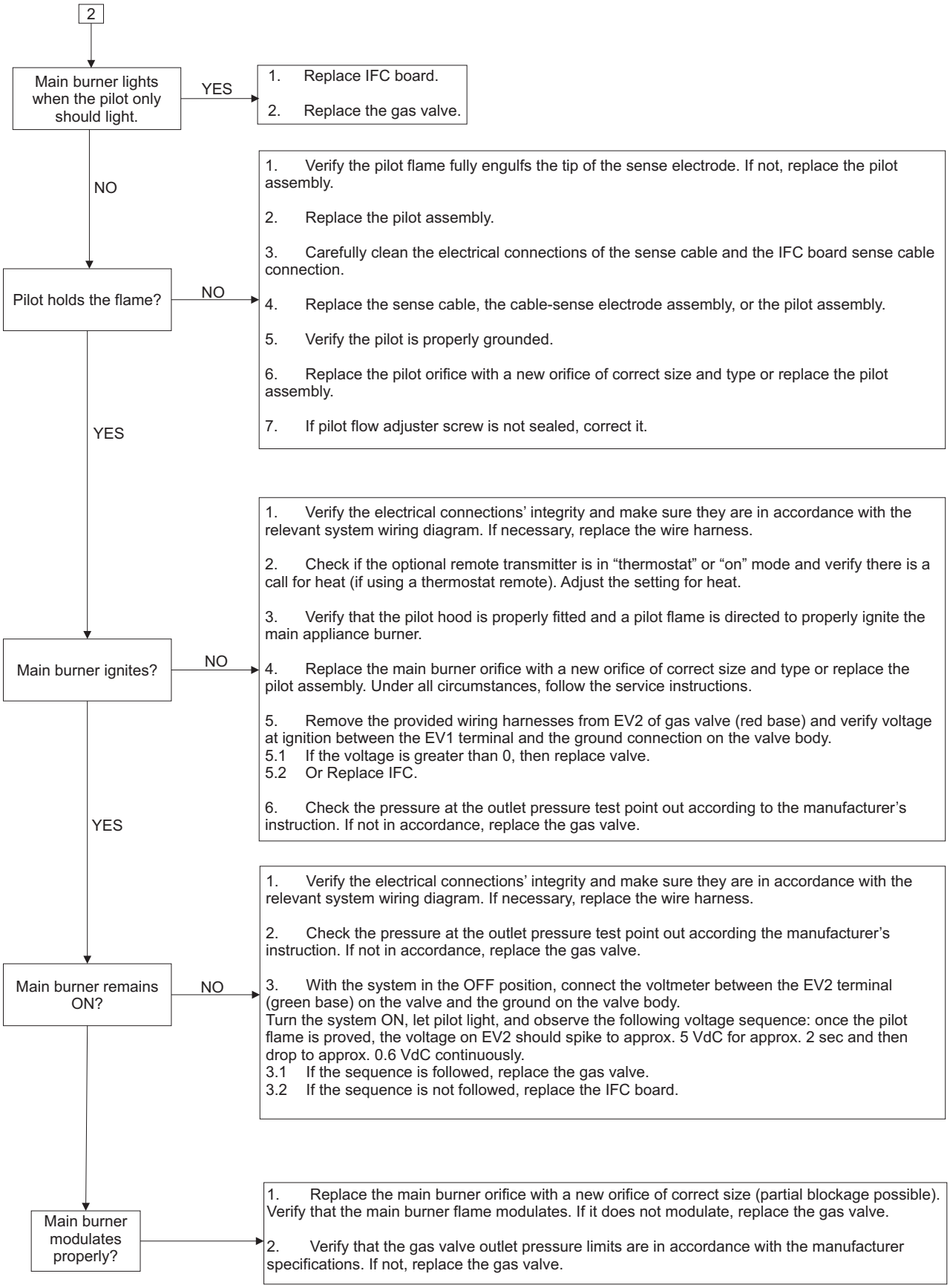

ACCESSING VALVE COMPARTMENT

Accessing Valve Compartment

1. Remove the following items: **See Figure 75**.

- Barrier Screen (See Maintenance and Service section for Instructions).
- Glass Frame Assembly (See Maintenance and Service section for Instructions).

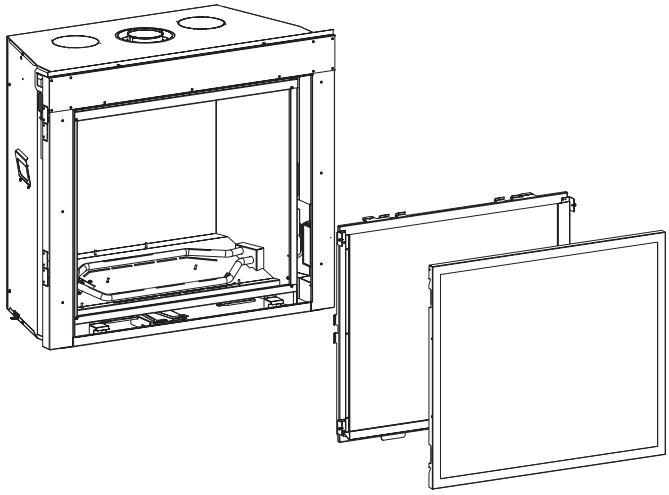

•

Figure 75

2. Remove the log set and set aside**.**

3. Remove the top liner bracket and top liner **See Figures 76 and 77.**

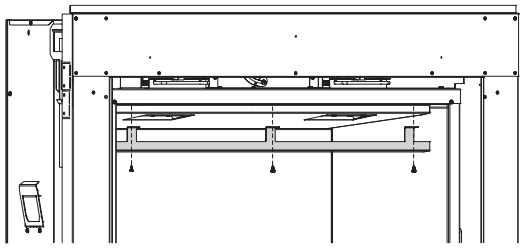

Figure 76

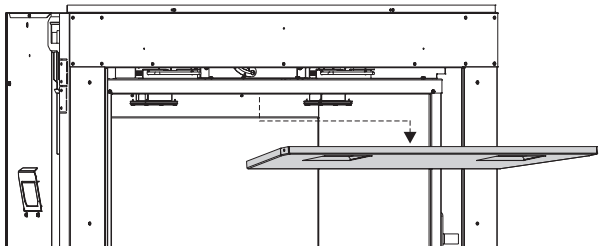

Figure 77

4. Remove right liner panel. **See Figure 78.**

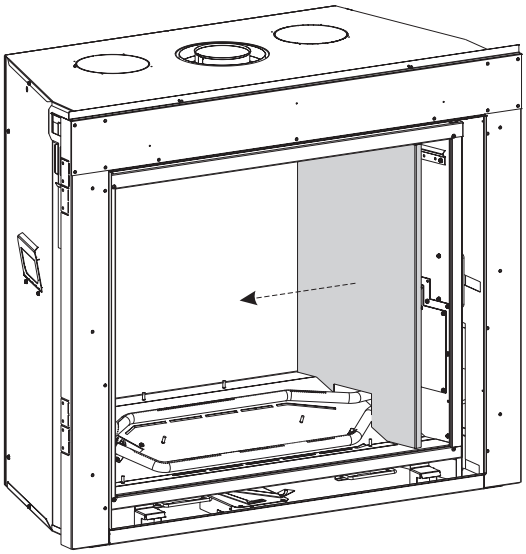

Figure 78

5. Remove Access Panel. **See Figure 79.**

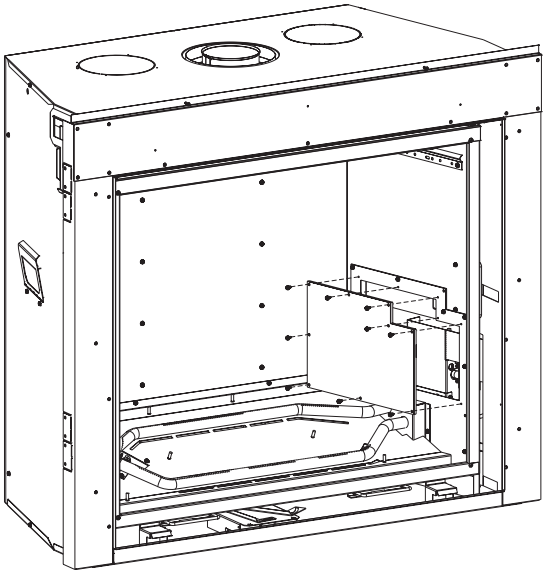

Figure 79

TESTING THE GAS SUPPLY PRESSURE

Natural Gas will have a manifold pressure of approximately 3.5 inches w.c. at the pressure regulator outlet with the inlet pressure to the pressure regulator from a minimum of 4.5 inches w.c. for the purpose of input adjustment to a maximum of 14 inches w.c.

Propane Gas will have a manifold pressure approximately 10.0 inches w.c. at the pressure regulator outlet with the inlet pressure to the pressure regulator from a minimum of 11.0 inches w.c. for the purpose of input adjustment to a maximum of 14.0 inches w.c.

GAS SUPPLY PRESSURES (INCHES WATER COLUMN)			
GAS TYPE	**MAXIMUM**	**MINIMUM**	**MANIFOLD**
Natural	14	4.5	3.5
Propane	14	11	10

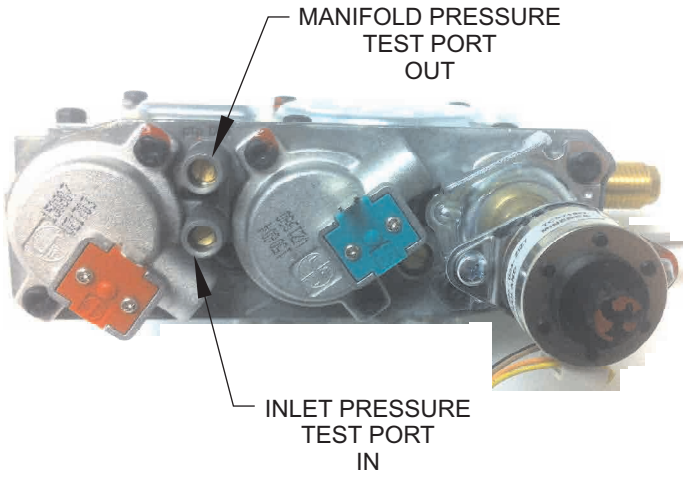

Figure 80

PARTS LIST

INDEX NO.	DVCT36 PART#	DVCT40 PART#	DESCRIPTION
1	37247	34719	OUTER WRAPPER TOP
2	R12926	R12319	INSULATION TOP (2)
3	R12344	R12320	INSULATION TOP, CENTER
4	37335	37510	ACCESS BOX, REAR
5	34799	34799	GAS LINE ACCESS PLATE
6	17162	17162	JUNCTION BOX ASSEMBLY
7	33332	33332	HEAT SHIELD, JUNCTION BOX
10	R2423	R2423	CONNECTOR 5/16 TUBE
11	R6207	R6207	ELBOW, 5/16 x3/8 90 DEG
12	38353	R11546	SOLENOID REPLACEMENT KIT
13	P133	P133	NIPPLE 3/8 x 2
14	R11233	R11233	VALVE, NATURAL
14	R11234	R11234	VALVE, PROPANE
15	R10882	R10882	ELBOW, 3/8 x 3/8 90 DEG
16	30947	30947	VALVE BRACKET
17	*R12383	*R12383	RECEIVER MODULE
18	34741	34741	VALVE BRACKET SUPPORT
19	R11675	R11675	HOLDER, ORIFICE (QTY. 2)
20	R12341	R12152	GASKET, BURNER WALL
21	37223	34743	BURNER WALL
22	R12342	R12153	GASKET, ACCESS PANEL
23	R11269	R11269	GAS LINE BRACKET
24	R7572	R7572	JAMB NUT, 1/4"-18 NPS (QTY 2)
25	P300		ORIFICE #48 NATURAL (FRONT)
25		P314	ORIFICE 2.25mm NATURAL (FRONT)
25	P319		ORIFICE 2.40mm NATURAL (REAR)
25		P323	ORIFICE 2.45mm NATURAL (REAR)
25	P208		ORIFICE 1.45mm PROPANE (REAR)
25		P258	ORIFICE 1.55mm PROPANE (REAR)
25	P287	P287	ORIFICE #56 PROPANE (FRONT)
26	37214	34744	ACCESS PANEL
* 27	37261	34745	TARGET, FRONT (NATURAL ONLY)
* 28	37261	34793	TARGET, REAR (NATURAL ONLY)
29	34789	34789	ACCENT LIGHT ASSEMBLY (QTY 2)
30	34781	34781	CATALYST ASSEMBLY COMPLETE
31	R12340	R12168	BURNER TUBE - REAR
32	R12283	R12283	PILOT ASSEMBLY - CONVERTIBLE
33	34746	34746	PILOT BRACKET
34	R12339	R12167	BURNER TUBE - FRONT
35	37254	34780	BURNER BASE ASSEMBLY
36	34775	34775	AIR BOX, ORIFICE ASSEMBLY
37	R12171	R12171	CABLE STOP (QTY 2)
38	37333	37833	AIR SHUTTER SLIDE ASSEMBLY
39	34750	34750	AIR SHUTTER BRACKET (QTY 2)
40	37217	34727	AIR SHUTTER GUIDE (QTY 2)
41	34751	34751	AIR SHUTTER ARM, SHORT
42	34752	34752	AIR SHUTTER ARM, LONG
43	37258	34787	GLASS FRAME ASSEMBLY COMPLETE
44	41422	41177	SCREEN ASSEMBLY
45	37336	37511	ACCESS BOX, FRONT
46	N/A	41423	TOP HEAT SHIELD (DVCT40 ONLY)
47	33331	33331	WALL THIMBLE SPACER
N/S	28932	28932	LATCH TOOL
N/S	15496	15496	ROCKWOOL (2)
N/S	R10928	R10928	LIGHT BULB, 35W (QTY 2)
N/S	R9341	R9341	GLASS, ACCENT LAMP (QTY 2)
N/S	R9342	R9342	BEZEL, ACCENT LAMP(QTY 2)
N/S	R11524	R11524	WIRE HARNESS, RECEIVER
N/S	R11545	R11545	LIGHT-BLOWER TERMINAL BLOCK
N/S	R11551	R11551	WIRE HARNESS, PROFLAME2
N/S	R11552	R11552	WIRE ASSEMBLY, MODULE TO INTERFACE
N/S	R11730	R11730	WIRE HARNESS, MODULE TO JUNCTION BOX
N/S	R12256	R12256	WIRE ASSEMBLY (BLOWER)
N/S	R12269	R12269	WIRE HARNESS, ACCENT LIGHT TERMINATION
N/S	R12270	R12270	JUMPER WIRE, MODULE
N/S	R7591	R7591	FLEXLINE 3/8 X 12 WITH SHUTOFF
N/S	R11550	R11550	REMOTE
N/S	R11584	R11584	BATTERY HOLDER AND SWITCH

*Also order a R12270 Jumper Wire. **NOTE:** The Jumper Wire must be connected to the "X4" terminal pins on the Proflame II Control Module.

N/S = NOT SHOWN
*** = NATURAL UNITS ONLY**

EXPLODED VIEW

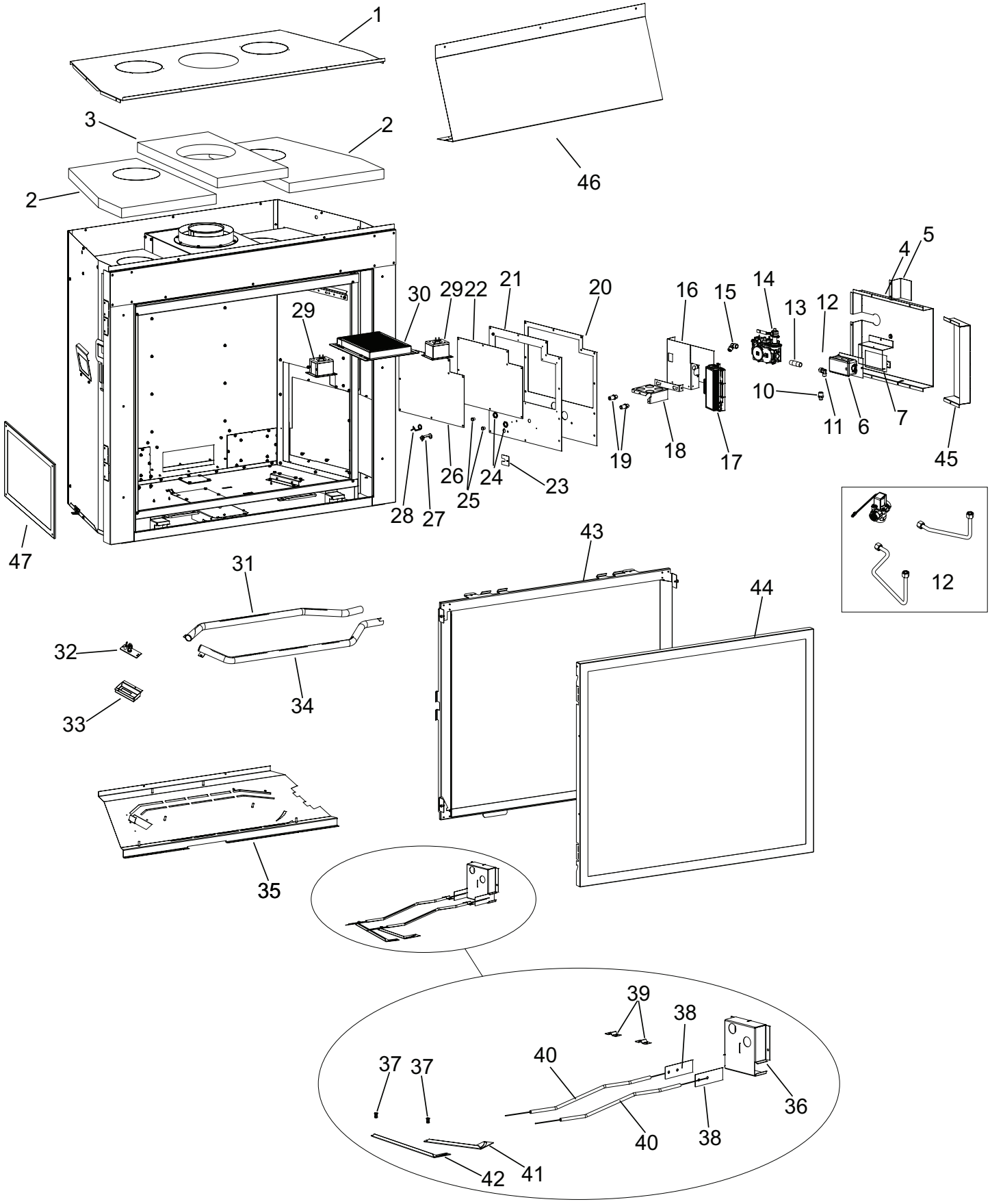

MAINTENANCE AND SERVICE

Glass & Barrier Removal

1. Lift barrier screen and pull towards you.

2. Use the Glass Latch Tool to grip the latch bar and pry it over the Glass Frame hook flanges. Tilt the Glass Frame towards you and pull upwards to remove it from the unit. **See Figures 81 and 82.**

⚠ CAUTION

Glass clips are tightly sprung. If the latch tool slips off of the latch while pulling, injury may occur. Ensure that the latch tool is completely hooked around the glass latch before trying to disengage the glass clips from the glass assembly.

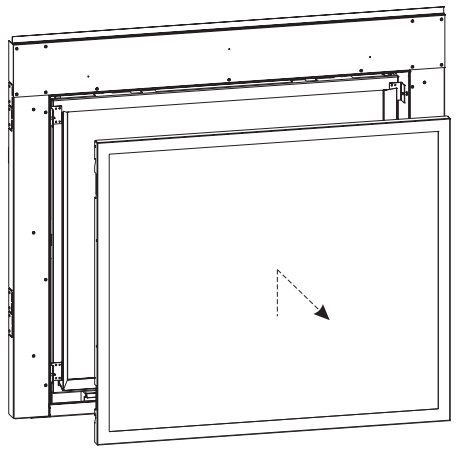

Figure 81

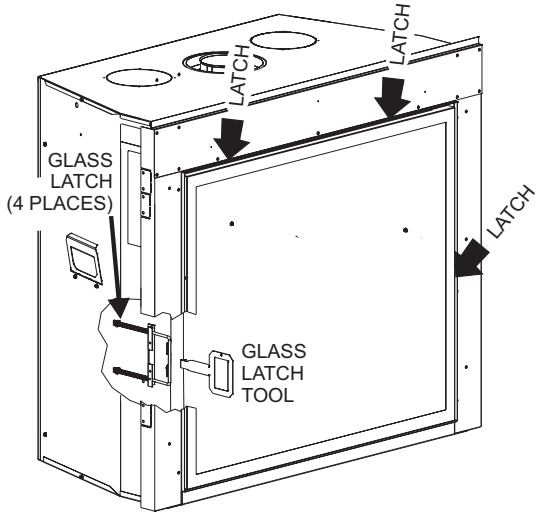

Figure 82

Light Bulb(s) Replacement

1. Remove the following items:
- screen barrier
- glass frame assembly

This unit comes standard with two lights that are attached to the roof of the fireplace. To access the light bulb you will remove the following items by removing four screws per light: **See Figure 82.**
- metal bezel
- glass
- gasket

NOTE: Use gloves when handling light bulb, oils on your hand will diminish the life span of the light bulb.

2. Remove old light bulb and replace with a new one. **See Figure 84.**

NOTE: You may order light bulbs from your local Empire dealer or purchase them from your local hardware store.

LIGHT BULB SPECIFICATIONS
35w Clear Halogen, Bi-Pin 6.35mm base,120vac, UL

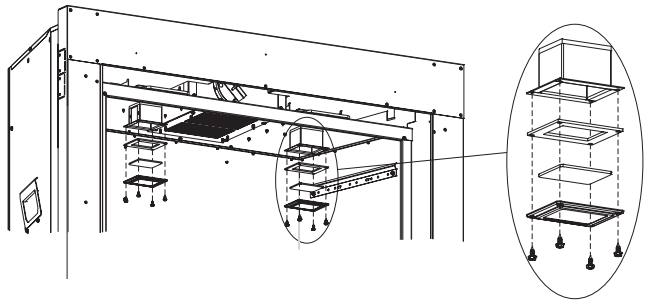

Figure 83

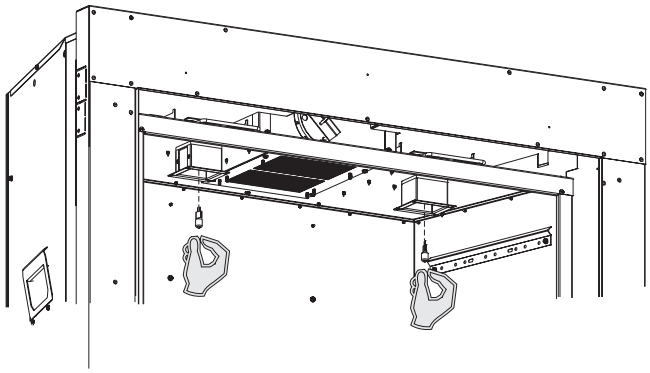

Figure 84

MAINTENANCE AND SERVICE (CONT'D)

FOR THE INSTALLER

Maintenance Precautions

Installation and repair should be done by a qualified service person. The fireplace should be inspected before use and at least annually by a qualified service person. More frequent cleaning might be required due to excessive lint from carpeting, bedding material, etc.

Keep burner and control compartment clean.

Examine venting system periodically and replace damaged parts.

Make a periodic visual check of pilot and burners. Clean and replace damaged parts.

Damaged Fireplace

Do not use this fireplace if any part has been under water. Immediately call a qualified service technician to inspect the fireplace and to replace any part of the control system and any gas control which has been under water.

In the event of a natural disaster (tornado, earthquake, fire, etc.) have a qualified technician inspect the fireplace for damage or potential gas leaks. Repair or replace any damaged components before operating this fireplace.

Annual Inspection

- Have the fireplace inspected annually before use.
- More frequent inspection and cleaning may be required if the fireplace is installed in an area exposed to pet hair or dust, or to excessive lint from new carpeting or bedding materials.

During The Annual Checkup, The Technician Will:

- Inspect the pilot (flame safety system) and burner(s) for proper operation and replace any damaged parts.
- Test and measure the flame failure response time of the flame safety system. It must de-energize the safety shut-off in no more than 30 seconds.
- Vacuum and clean any foreign debris in the firebox that is not supposed to be there.
- Inspect and ensure that the lighting of the main burner occurs within 4 seconds of the gas valve opening. Visual inspection should match the information illustrated in the manual. Inspect primary air openings for blockage.
- Check the glass and gasket for proper seal.
- Clean Glass with a suitable fireplace glass cleaner. Abrasive cleaners must not be used. Be careful not to scratch the glass when cleaning.
- Check all latches or other door retention components for proper operation, tension, and relief mechanisms are free from obstructions. **See Figure 82.**
- Check the barrier screen for fit and structural integrity. **See Figure 81.**
- Inspect the log set (if applicable) and decorative media (if applicable) for debris or damage.
- Freshen up the glowing embers if applicable.
- Replace batteries in the remote transmitter and receiver if applicable.
- Inspect the venting and vent termination cap for damage, corrosion, sooting, or obstruction and correct if present.
- Check all accessible gas-carrying tubes, connections, pipes and other components for leaks.
- *In addition, clean and inspect the fireplace following any remodeling work in your home.*

IMPORTANT SAFETY INFORMATION

Before enclosing the vent pipe assembly, operate the appliance to ensure it is venting properly.

DO NOT OPERATE THIS APPLIANCE WITHOUT GLASS FRONT PANEL INSTALLED

⚠ WARNING

1. "Due to high temperatures, the appliance should be located out of traffic and away from furniture and draperies."
2. "Children and adults should be alerted to the hazards of high surface temperature and should stay away to avoid burns or clothing ignition."
3. "Young children should be carefully supervised when they are in the same room as the appliance. Toddlers, young children, and others may be susceptible to accidental contact burns. A physical barrier is recommended if there are at-risk individuals in the house. To restrict access to a fireplace or stove, install an adjustable safety gate to keep toddlers, young children, and other at-risk individuals out of the room and away from hot surfaces."
4. For appliances requiring a barrier, as determined under Clause 5.15.4: "A barrier designed to reduce the risk of burns from the hot viewing glass is provided with this appliance and shall be installed for the protection of children and other at-risk individuals."
5. "If the barrier becomes damaged, the barrier shall be replaced with the manufacturer's barrier for this appliance."
6. "Clothing or other flammable material should not be placed on or near the appliance."
7. "Any safety screen, guard, or barrier removed for servicing an appliance must be replaced prior to operating the appliance" (see Clause 4.1.6).
8. "Installation and repair should be done by a qualified service person. The appliance should be inspected before use and at least annually by a professional service person. More frequent cleaning might be required due to excessive lint from carpeting, bedding material, et cetera. It is imperative that control compartments, burners, and circulating air passageways of the appliance be kept clean."
9. The instructions for an appliance optionally for use with glass doors (or equivalent) shall state that, "Only doors certified with the appliance shall be used."
10. The instructions for an appliance not intended for use with glass doors (or equivalent) shall emphasize that the appliance is not for use with glass doors.
11. Where applicable, provide a means by which the consumer can identify the barrier, (such as graphic representation, clear description, or reference marking).

⚠ WARNING

CARBON MONOXIDE POISONING HAZARD

Failure to follow the steps outlined below for each appliance connected to the venting system being placed into operation could result in carbon monoxide poisoning or death. The following steps shall be followed for each appliance connected to the venting system being placed into operation, while all other appliances connected to the venting system are not in operation:

1. Seal any unused openings in the venting system.
2. Inspect the venting system for proper size and horizontal pitch, as required in the *National Fuel Gas Code ANSI Z223.1/NFPA 54* or *the National Gas and Propane Installation Code* CSA B149.1 and these instructions. Determine that there is no blockage or restriction, leakage, corrosion and other deficiencies which could cause an unsafe condition.
3. As far as practical, close all building doors and windows and all doors between the space in which the appliance(s) connected to the venting system are located and other spaces of the building.
4. Close fireplace dampers.
5. Turn on clothes dryers and any appliance not connected to the venting system. Turn on any exhaust fans, such as range hoods and bathroom exhausts, so they are operating at maximum speed. Do not operate a summer exhaust fan.
6. Follow the lighting instructions. Place the appliance being inspected into operation. Adjust the thermostat so appliance is operating continuously.
7. Test for spillage from draft hood equipped appliances at the draft hood relief opening after 5 minutes of main burner operation. Use the flame of a match or candle.
8. If improper venting is observed during any of the above tests, the venting system must be corrected in accordance with *National Fuel Gas Code*, ANSI Z223.1/NFPA and/or *National Gas and Propane Installation Code*, CSA B149.1.
9. After it has been determined that each appliance connected to the venting system properly vents when tested as outlined above, return doors, windows, exhaust fans, fireplace dampers and any other gas-fired burning appliance to their previous conditions of use.

REQUIREMENTS FOR MASSACHUSETTS

For all side wall horizontally vented gas fueled equipment installed in every dwelling, building or structure used in whole or in part for residential purposes, including those owned or operated by the Commonwealth and where the side wall exhaust vent termination is less than seven feet above finished grade in the area of the venting, including but not limited to decks and porches, the following requirements shall be satisfied:

1. INSTALLATION OF CARBON MONOXIDE DETECTORS. At the time of installation of the side wall horizontal vented gas fueled equipment, the installing plumber or gasfitter shall observe that a hard wired carbon monoxide detector with an alarm and battery back-up is installed on the floor level where the gas equipment is to be installed. In addition, the installing plumber or gasfitter shall observe that a battery operated or hard wired carbon monoxide detector with an alarm is installed on each additional level of the dwelling, building or structure served by the side wall horizontal vented gas fueled equipment. It shall be the responsibility of the property owner to secure the services of qualified licensed professionals for the installation of hard wired carbon monoxide detectors

    a. In the event that the side wall horizontally vented gas fueled equipment is installed in a crawl space or an attic, the hard wired carbon monoxide detector with alarm and battery back-up may be installed on the next adjacent floor level.

    b. In the event that the requirements of this subdivision can not be met at the time of completion of installation, the owner shall have a period of thirty days to comply with the above requirements; provided, however, that during said thirty day period, a battery operated carbon monoxide detector with an alarm shall be installed.

2. APPROVED CARBON MONOXIDE DETECTORS. Each carbon monoxide detector as required in accordance with the above provisions shall comply with NFPA 720 and be ANSI/UL 2034 listed and IAS certified.

3. SIGNAGE. A metal or plastic identification plate shall be permanently mounted to the exterior of the building at a minimum height of eight feet above grade directly in line with the exhaust vent termination for the horizontally vented gas fueled heating appliance or equipment. The sign shall read, in print size no less than 1/2 inch in size, **"GAS VENT DIRECTLY BELOW. KEEP CLEAR OF ALL OBSTRUCTIONS".**

4. INSPECTION. The state or local gas inspector of the side wall horizontally vented gas fueled equipment shall not approve the installation unless, upon inspection, the inspector observes carbon monoxide detectors and signage installed in accordance with the provisions of 248 CMR 5.08(2)(a) 1 through 4.

    (b) EXEMPTIONS: The following equipment is exempt from 248 CMR 5.08(2)(a)1 through 4:

        1. The equipment listed in Chapter 10 entitled "Equipment Not Required To Be Vented" in the most current edition of NFPA 54 as adopted by the Board; and

        2. Product Approved side wall horizontally vented gas fueled equipment installed in a room or structure separate from the dwelling, building or structure used in whole or in part for residential purposes.

    (d) MANUFACTURER REQUIREMENTS - GAS EQUIPMENT VENTING SYSTEM NOT PROVIDED. When the manufacturer of a Product Approved side wall horizontally vented gas fueled equipment does not provide the parts for venting the flue gases, but identifies "special venting systems", the following requirements shall be satisfied by the manufacturer:

        1. The referenced "special venting system" instructions shall be included with the appliance or equipment installation instructions; and

        2. The "special venting systems" shall be Product Approved by the Board, and the instructions for that system shall include a parts list and detailed installation instruction.

    (e) A copy of all installation instructions for all Product Approved side wall horizontally vented gas fueled equipment, all venting instructions, all parts lists for venting instructions, and/or all venting design instructions shall remain with the appliance or equipment at the completion of the installation.

MASTER PARTS DISTRIBUTOR LIST

To Order Parts Under Warranty, please contact your local Empire dealer. See the dealer locator at www.empirecomfort.com. To provide warranty service, your dealer will need your name and address, purchase date and serial number, and the nature of the problem with the unit.

To Order Parts After the Warranty Period, please contact your dealer or one of the Master Parts Distributors listed below. This list changes from time to time. For the current list, please click on the Master Parts button at www.empirecomfort.com.

Please note: Master Parts Distributors are independent businesses that stock the most commonly ordered Original Equipment repair parts for Heaters, Grills, and Fireplaces manufactured by Empire Comfort Systems Inc.

Dey Distributing
1401 Willow Lake Boulevard
Vadnais Heights, MN 55101

Phone: 651-490-9191
Toll Free: 800-397-1339
Website: www.deydistributing.com
Parts: Heater, Hearth and Grills

F. W. Webb Company
200 Locust Street
Hartford, CT 06114

Phone: 860-722-2433
Toll Free: 800-243-9360
Fax: 860-293-0479
Toll Free Fax: 800-274-2004
Websites: www.fwwebb.com & www.victormfg.com
Parts: Heater, Hearth and Grills

East Coast Energy Products
10 East Route 36
West Long Branch, NJ 07764

Phone: 732-870-8809
Toll Free: 800-755-8809
Fax: 732-870-8811
Website: www.eastcoastenergy.com
Parts: Heater, Hearth and Grills

HOW TO ORDER REPAIR PARTS

Parts Not Under Warranty

Parts can be ordered through your Service Person, Dealer, or a Master Parts Distributor. See this page for the Master Parts Distributors list. For best results, the **service person or dealer** should order parts through the distributor. Parts can be shipped directly to the **service person/dealer**.

Warranty Parts

Warranty parts will need a proof of purchase and can be ordered by your Service Person or Dealer. Proof of purchase is **required** for warranty parts.

All parts listed in the Parts List have a Part Number. When ordering parts, first obtain the Model Number and Serial Number from the name plate on your equipment. Then determine the Part Number (**not** the Index Number) and the Description of each part from the following illustration and part list. Be sure to give all this information . . .

Appliance Model Number _____ Part Description _____

Appliance Serial Number _____ Part Number _____

Type of Gas (Propane or Natural) _____

Do not order bolts, screws, washers or nuts. They are standard hardware items and can be purchased at any local hardware store.

Shipments contingent upon strikes, fires and all causes beyond our control.

WARRANTY

Empire Comfort Systems Inc. warranties this hearth product to be free from defects at the time of purchase and for the periods specified below. Hearth products must be installed by a qualified technician and must be maintained and operated safely, in accordance with the instructions in the owner's manual. This warranty applies to the original purchaser only and is not transferable. All warranty repairs must be accomplished by a qualified gas appliance technician.

Limited Lifetime Parts Warranty – Combustion Chamber, Heat Exchanger, and Factory-Installed Glass

If the combustion chamber, heat exchanger (see parts list) or factory-installed glass fails because of defective workmanship or material, Empire will repair or replace at Empire's option.

Limited Three-Year Parts Warranty – All Other Components
(Except Remote Controls, Thermostats, Accessories and Replacement Parts)

Should any part fail because of defective workmanship or material within three years from the date of purchase, Empire will repair or replace at Empire's option..

Limited One-Year Parts Warranty – Remote Controls, Thermostats, Lighting System, Accessories, and Parts

Should any remote control, thermostat, lighting system, accessory, or other part fail because of defective workmanship within one year from the date of purchase, Empire will repair or replace at Empire's option.

Duties of the Owner

The appliance must be installed by a qualified installer and operated in accordance with the instructions furnished with the appliance. A bill of sale, canceled check, or payment record should be kept to verify purchase date and establish warranty period. Ready access to the appliance for service.

What Is Not Covered

Damages that might result from the use, misuse, or improper installation of this appliance.
Travel, diagnostic costs and freight charges on warranted parts to and from the factory.
Claims that do not involve defective workmanship or materials.
Unauthorized service or parts replacements.
Removal and reinstallation cost.
Inoperable due to improper or lack of maintenance.

How To Get Service

To make a claim under this warranty, please have your receipt available and contact your installing dealer. Provide the dealer with the model number, serial number, type of gas, and purchase verification. The installing dealer is responsible for providing service and will contact the factory to initiate any warranted parts replacements. Empire will make replacement parts available at the factory. Shipping expenses are not covered.

If, after contacting your Empire dealer, service received has not been satisfactory, contact: Consumer Relations Department, Empire Comfort Systems Inc., PO Box 529, Belleville, Illinois 62222, or send an e-mail to info@empirecomfort.com with "Consumer Relations" in the subject line.

Your Rights Under State Law

This warranty gives you specific legal rights, and you may also have other rights, which vary from state to state.

Empire Comfort Systems Inc.
Belleville, IL

If you have a general question about our products, please e-mail us at info@empirecomfort.com.

If you have a service or repair question, please contact your dealer.

www.empirecomfort.com